TOTAL SOLUTIONS FOR
AUTOMATIC WELDING & CUTTING
LINCOLN ELECTRIC
THE WELDING EXPERTS®
www.lincolnelectriceurope.com

"Automation" is an excellent opportunity for companies looking for continuous Improvement and performances.

For Lincoln Electric the automation of welding and cutting processes is not new, but rather a source of innovation that we want to share with our customers.

We invest heavily in the development of intelligent welding and cutting technology solutions to combine the quality and performance you want.

Automation in general brings important changes in the way you organize your workshops. It is for this reason that the pooling of our expertise in the search for the most suitable solution is essential in order to increase your productivity, the reliability, the safety of your staff, all in the greatest respect. of the environment.

This catalog is a concentrate of technology, and you will find I am sure a response to your manufacturing needs, but the easiest for you is still to contact us, so that together we realize your "factory of the future".

I wish you a good visit.

Eric Sellier
Automation EMEAR Vice-President

The ever changing economic conditions of the welding & cutting markets, served by our loyal customers, make it necessary for them to be continually looking to improve and innovate their welding & cutting activities.

As a solution provider, Lincoln Electric's extensive automation range offers productivity solutions across all industrial segments allowing companies to adapt to the ever changing needs of the market environments.

The range is supported by our dedicated technical sales network, and engineering specialists, who can visit your premises to discuss and propose engineering solutions that range from simple plug and play equipment to full turn-key packages offering tangible cost and quality improvements in your process.

Please don't hesitate to contact your local Lincoln Electric office, or representative, to request a site visit or if you require any additional information on the products shown within the catalogue.

Craig Glasgow
Commercial Director - Automation International

SUMMARY

TOTAL AUTOMATIC WELDING AND CUTTING SOLUTIONS

AUTOMATIC WELDING

Welding processes presentation 4

PLASMA / TIG WELDING **6**
- Machine range 6
- Installation & equipment 8
- Welding in line pipe 12
- TOPTIG 14
- Microplasma 15
- Machines presentation 16

SUBMERGED ARC WELDING **18**
- Machine range 18
- Process & installation 20
- Power sources 22
- SAW equipment 24
- Narrow gap equipment 26
- Multiple wires equipment 27
- Strip cladding equipment 28
- SAW tractors 30
- SAW internal boom 31
- BEAM-MATIC installation 32
- T-MASTER installation 33
- Windmill solutions 34
- Lamp post solutions 35

MIG / MAG WELDING **36**
- Machine range 36
- DIGIWAVE installation 38
- POWERWAVE installation 39
- MIG/MAG equipment 40
- MIG/MAG welding carriages 41

POSITIONING **42**
- Positioning range 42
- CB-MATIC column & booms 44
- SEAM-MATIC seamer benches 46
- Mechanisation 48
- ROTAMATIC single roller beds 50
- ROTAMATIC fit up roller beds 52
- ROTAMATIC self aligning roller beds 53
- ROTAMATIC options 53
- POSIMATIC positioners 54
- HEADMATIC headstock 55
- TURNMATIC turntable 56

AUTOMATIC CUTTING

PYTHON X CUTTING SOLUTION **58**
- Cutting processes presentation **60**

FLEXCUT & NERTAJET HPi RANGE **62**
- FLEXCUT 125 64
- NERTAJET HPi process 65
- NERTAJET HPi equipment 66

OXYFUEL CUTTING TORCHES **68**
- OXYFUEL equipment 70

CUTTING MACHINE RANGE **72**
- TAGLIATUBI & PYROTOME 74
- TORCHMATE & EASYTOME 75
- OPTITOME 2 76
- ALPHATOME 2 77
- EUROTOME 2 78
- OXYTOME 2 & PLASMATOME 2 HPi 79
- OXYTOME & PLASMATOME RS HPi 80
- OXYTOME & PLASMATOME TWIN HPi 81
- CYBERTOME 82
- NERTAJET BEVEL HPi 83

OPTIONS **84**
- Pneumatic & numerical drilling unit 84
- Tube cutting & 4th axis 85
- Cooling, visual protection, voltage inverter, lighting 86
- Positioning and markers 87
- HPC 2 Digital Process 88

CUTTING SOFTWARE **90**

EXTRACTION TABLES **92**

SERVICES **94**

TOTAL AUTOMATIC WELDING AND CUTTING SOLUTIONS

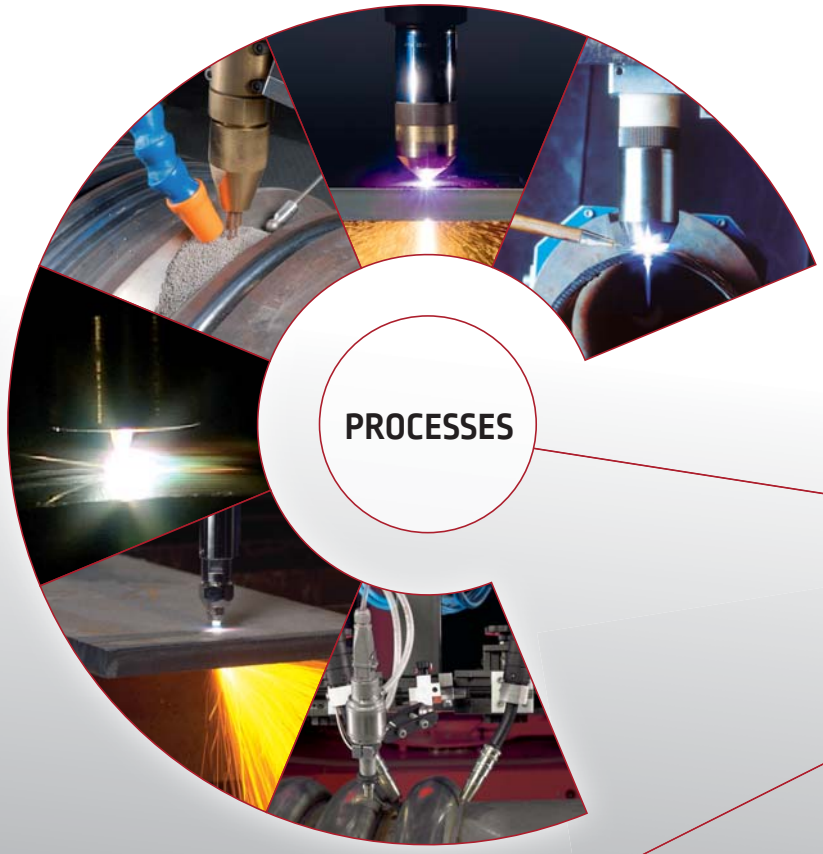

PROCESSES

TOTAL SOLUTIONS FOR AUTOMATION

QUALITY

SERVICES

ENVIRONMENT AND PROTECTION

ECO FRIENDLY WELDING &CUTTING

AUTOMATIC WELDING

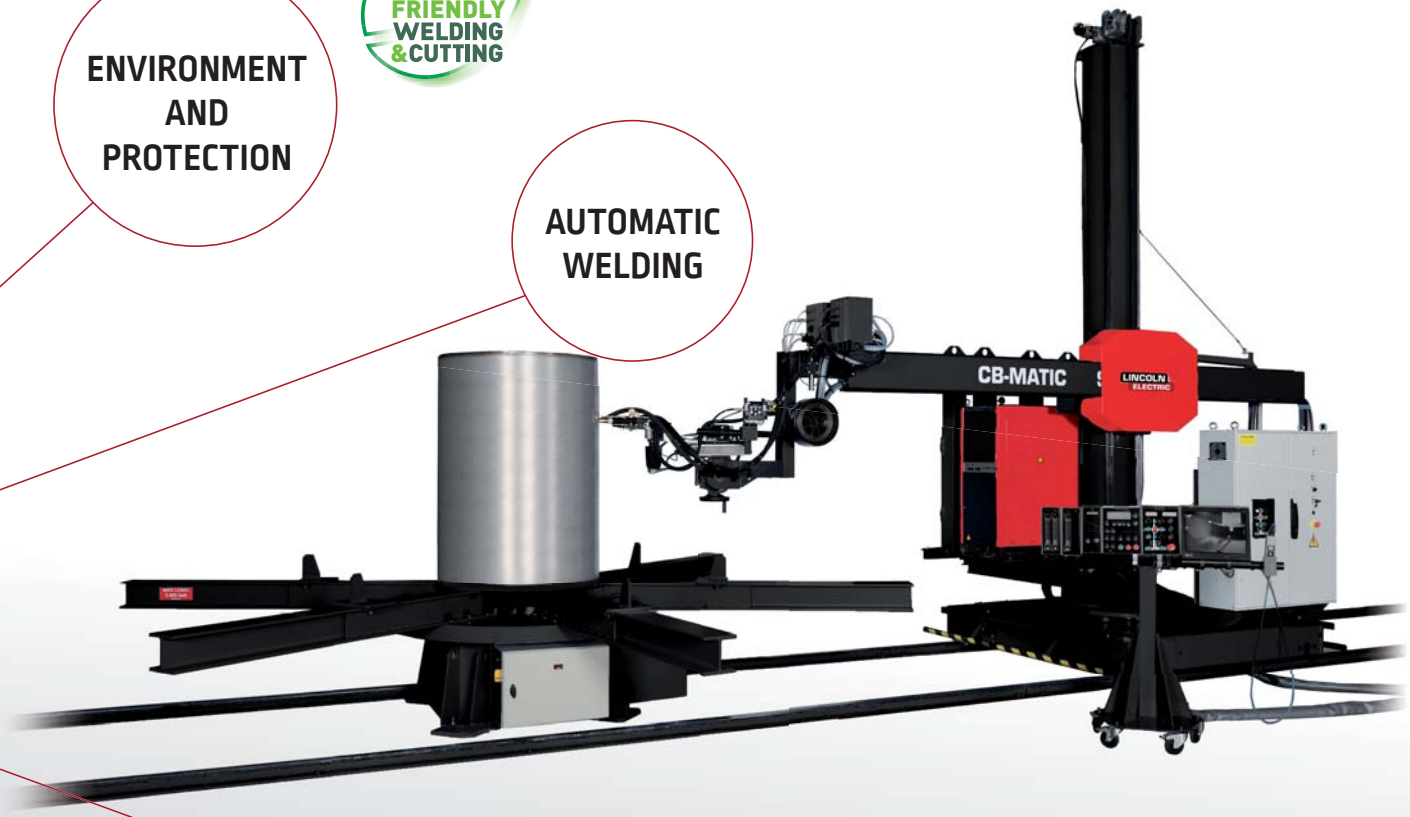

AUTOMATIC CUTTING

CONSUMABLES

WELDING PROCESSES

TIG Technology

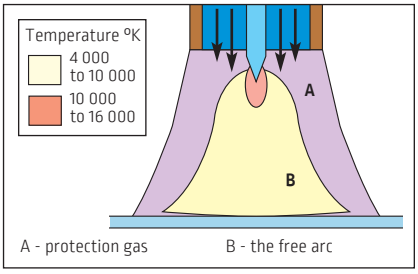

Metals are fused together by heating them with an electric arc. The electric arc is established between a non-consumable (does not melt) tungsten electrode and the workpiece. A filler metal may be used depending on the joint design. The molten metal is shielded from the atmosphere by a stream of inert gas supplied through the torch. The resulting deposited weld metal has the same integrity as the base material. This welding process is used for welding of carbon steel, stainless steel, aluminium, titanium, copper...

The benefits are:

- Good weld bead appearance,
- Adapted for fine thickness,
- Aluminium weldability,
- Welding in all positions.

TOPTIG Technology

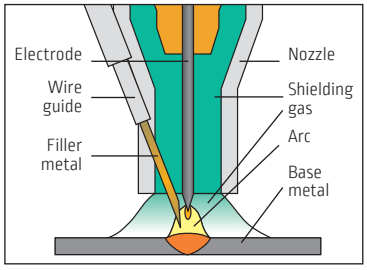

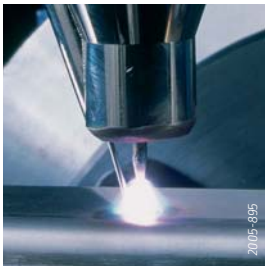

Based on principle of TIG process, an additional filler metal is fed through the nozzle directly into the arc with an angle of 20° to the electrode. This concept guarantees a high deposition rate and an efficient metal transfer. This welding process is used for welding of carbon steel, stainless steel, titanium, inconel, electro-galvanized coated steel (brazing)...

The benefits are:

- TIG high quality welding and guaranteed spatter free,
- Good global productivity,
- Excellent appearance of the weld bead,
- Torch accessibility and welding in all positions.

PLASMA Technology

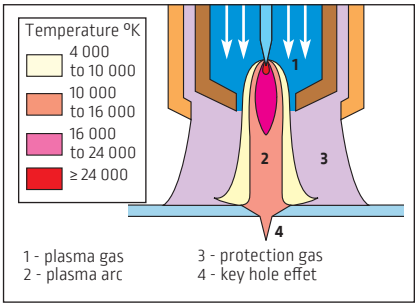

The contribution of energy necessary for welding is ensured by an electric arc in an atmosphere of plasmagene neutral gas. This arc established between an infusible electrode and the parts to be assembled is forced through a nozzle which constricts it mechanically and pneumatically. This welding process is used for welding of carbon steel, stainless steel, duplex, titanium, Inconel, nickel and alloys...

The benefits are:

- Reduction in the preparation times for assemblies by eliminating bevelling for thicknesses up to 10 mm,
- Joint quality: Complete and regular penetration guaranteed, 100% X- ray quality,
- Reduction of the heat affected zone thanks to the arc concentration,
- Respect of the base material chemical composition,
- Low distortion,
- Reduction or elimination of finishing operations,
- Excellent visual aspect.

MIG/MAG Technology

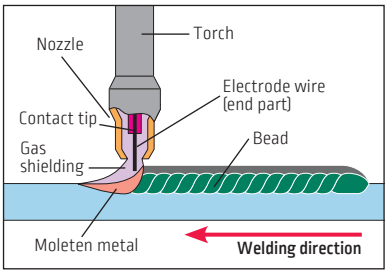

An electric arc forms between a consumable wire electrode and the workpiece (metal) which heats the workpiece metal causing them to fuse. The arc and weld pool are shielded by an inert or active gas. Metal is transfered in the form of drops through the arc towards the workpiece. This welding process is used for welding of carbon steel, stainless steel, aluminium, copper...

The benefits are:

- Easy implementation,
- High welding speed,
- Welding in all positions,
- Low welding investment cost.

SAW Technology

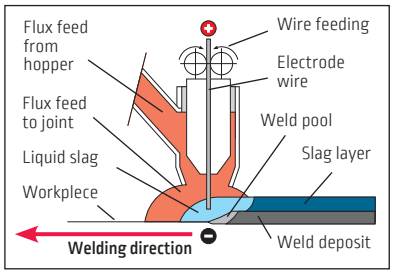

Similar to MIG/MAG welding, SAW involves the formation of an arc between a continuously fed wire electrode. Covering flux is used to generate protective gas and slag protecting the weld metal. The flux can also help donate alloying elements. It is dedicated mainly for flat and fillet welding. This process is generally used for the welding of materials as carbon steel and stainless steel.

The benefits are:

- High deposition rates,
- High penetration,
- Large execution speeds obtained by the use of high currents on one or more electrode-wires,
- Excellent compact joints with good mechanical properties,
- High duty cycle,
- Operator comfort: low fumes and invisible arc.

Lincoln Electric offers a large choice of welding processes through its products.

Several criteria allow to define the best process adapted to the customer application, function of materials, thicknesses, technology, quality and productivity required.

Segments

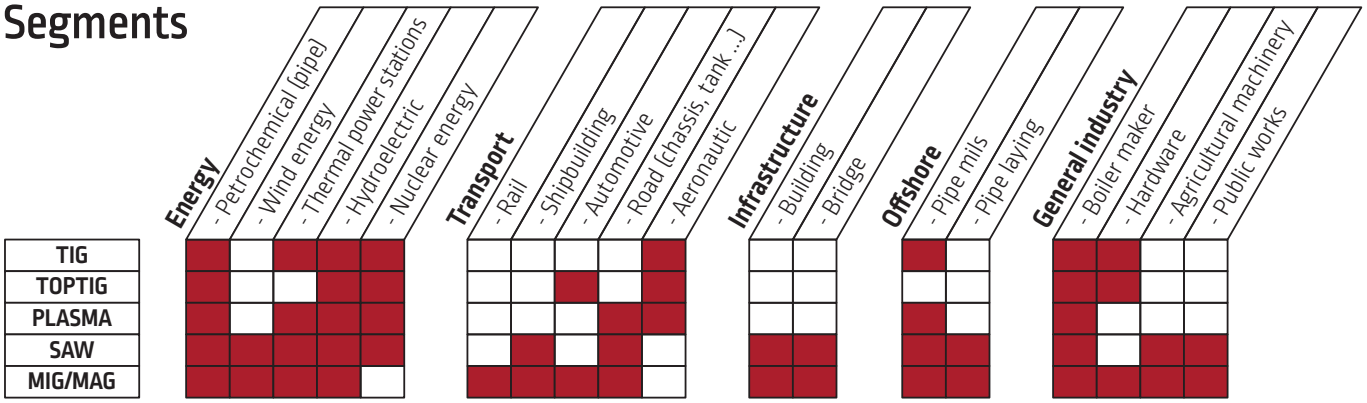

Welding perfomances

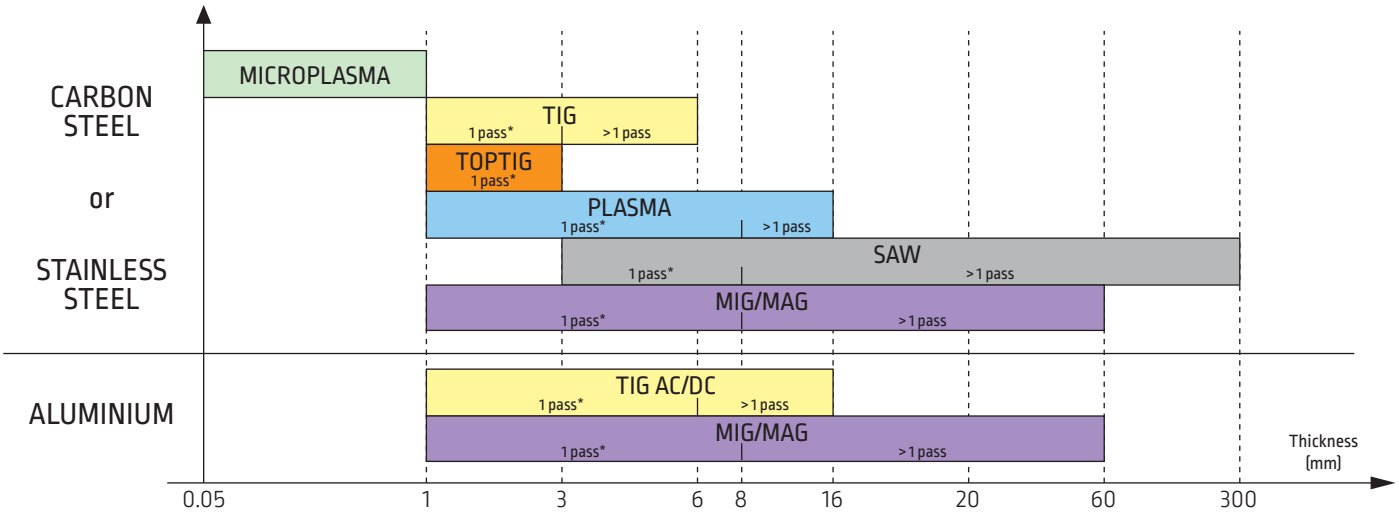

* indicative value depending of materials, preparations, applications...

Comparison of the main welding processes

	PROCESSES				
Choice criteria	TIG	TOPTIG	PLASMA	SAW	MIG/MAG
Quality	●	●	●	●	●
Speed	●	●	●	●●	●●
Spatter	●	●	●	●	●
Completion	●	●	●●	●	●
Cost	●	●	●	●	●●

● *Excellent*
● *Good*
● *Fair*

PLASMA / TIG MACHINE RANGE

The Plasma/TIG solutions are often used to weld vessels or pipes in various domains as food, transport, petrochemical or aeronautical industries.

Lincoln Electric proposes a large range of machines adapted and dedicated to each activity sector.

2011-154

Mechanisation machines

with TIG or plasma process for automatic welding of pipes or vessels with low diameter.

2000-343

Tricathode installation

for in line pipe welding with high productivity level.

2013-482

2008-468

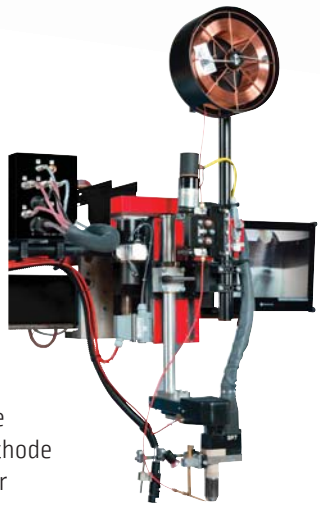

2013-575

Autonomous and multi-purpose welding installation

in monocathode Plasma/TIG version or in bicathode Plasma + TIG configuration for higher productivity.

2010-596

2007-471_ret

CITOTURN lathe

with microplasma installation used for high precision welding of thin precious metals.

Plasma/TIG seamer benches

for longitudinal welding of flat sheet metal or large vessels (internal or external welding)

2016-408_ret

2013-486

Specific machines

built from standard equipment and adapted to the customer applications

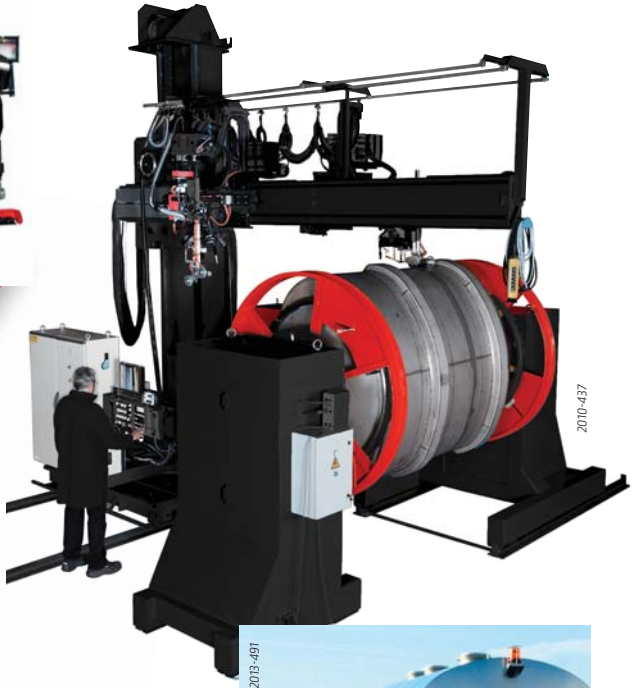

2010-437

2013-491

Plasma/TIG column and booms with rotators or turntable for circumferential, cornice, flat or vertical down welding

2015-567

2000-160

TIG AND PLASMA INSTALLATION

Applications

Multi-purpose welding installation to enable the following processes to be used in automatic applications:

- DC TIG with smooth or pulsed current,
- AC TIG with variable polarity,
- DC plasma with smooth or pulsed current.

This installation meets the highest quality standards for welding and productivity for industries as diverse as boiler-making using stainless steels, aeronautics using precious metals, chemical engineering, energy production, transformation and transport as well as prefabrication of gas and petrol pipelines etc.

TIG / PLASMA process and performance

The Plasma process is the ideal extension of TIG for thicknesses greater than 3 mm.

It ensures the same level of quality, higher performances and 100% penetration thanks to Key-Hole technology. The diagram shows the different welding performances according to the materials and thichnesses.

Maximum thickness which can be welded in a single pass is reduced for:

- vertical down and cornice (2G) welding positions,
- small diameter and very thick tubes.

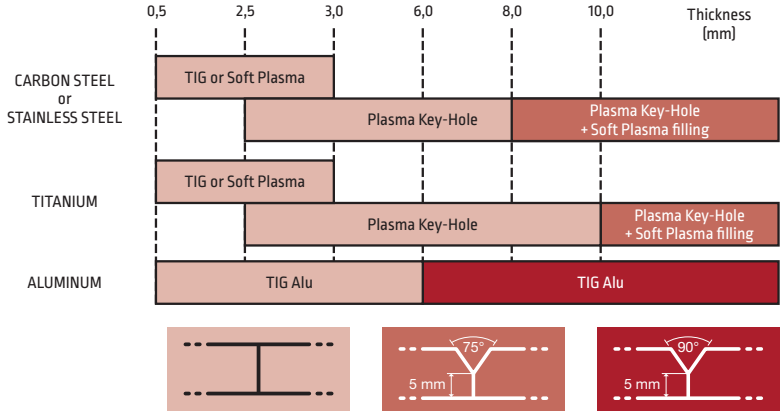

Improvement productivity with PLASMA +TIG Process

The Plasma + TIG process is specially designed for assembling panels for the prefabrication of vessels longer than 4 meters and carrying out circular welds for diameters greater than 2 meters.

This process of using 2 torches in tandem gives a productivity gain of 30-50 % over a single-torch plasma installation.

The “plasma” arc penetrates the butt-jointed panels. The “TIG” arc equipped with filler metal, electromagnetic arc oscillation and a gas trailing shield produces a perfect surface finish which can often be left without any further treatment.

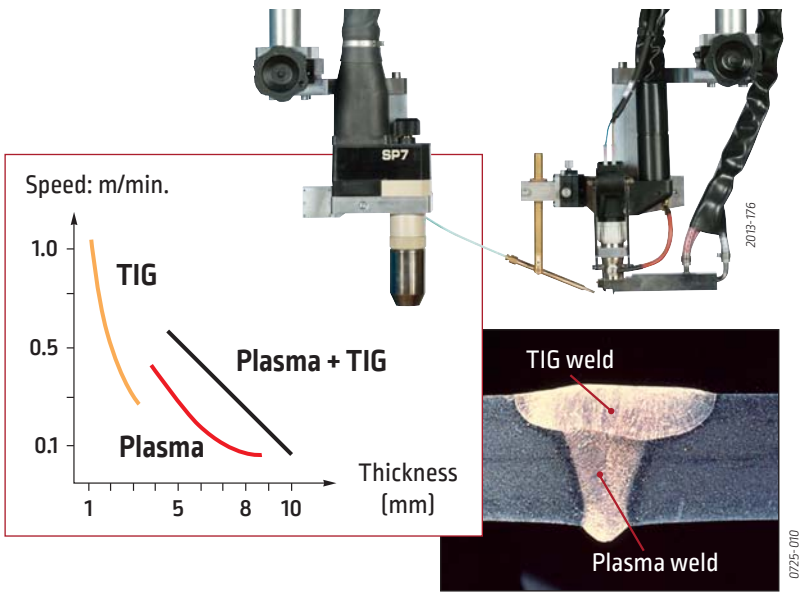

Single torch:
PLASMA or TIG

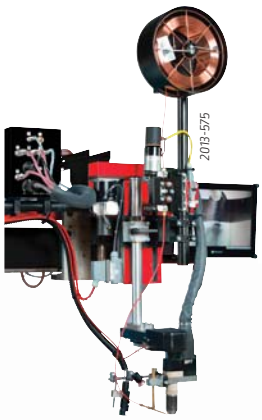

Bi-cathode: PLASMA+TIG

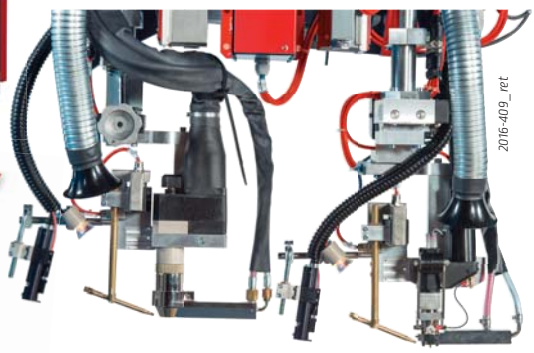

PERFORMANCES

TIG/PLASMA equipment

Lincoln Electric offers two types of control panel.

NERTAMATIC 450 Plus

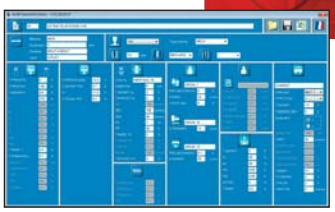

Tools edit programs and create WPS

NERTAMATIC 450 Plus integrates the management of the complete welding process controlled from a central panel, robust and easy to use with a clear text LCD screen display of 4 lines of 20 characters which allows:

- Storing of 99 welding programs (voltage, current, wire speed, plasma gas, movement speed, magnetic oscillation...),
- Parameters modification during welding,
- Cycle start/stop, manual control of gas/wire/AVC/ movement,
- Complete management of key hole closure,
- Pulse current settings for thin thickness welding and vertical or cornice welding,
- Easy integration and communication with external PLC thanks to Open PLC function,
- Import/export via USB key for uploading or downloading programs,
- Edition of programs on external computer, thanks to Off-line software.

HPW Advanced

HPW Advanced is a modern industrial PC allowing the global management of the complete welding process and machine axes. Its main characteristics are:

- Large touch screen 19" with a friendly and intuitive interface allowing the programming, controls and follow up,
- Numerical management of the welding process, its associated movements and drive units via industrial PC,
- Traceability, a program integrates all the parameters allowing the repeatability of the welding operation,
- Video monitoring integrated in control screen
- Quality follow-up in option, record and storage of the essential parameters of welding (current, voltage, gas, wire feeding, movement),
- Wireless remote control (option),
- Import/export via USB key for uploading or downloading programs and WPS edition.

Welding

Programming

Configuration

Quality *(as a option)*

Wireless remote control

TIG AND PLASMA EQUIPMENTS

Power source

The power source **NERTAMATIC 450 Plus** centralizes the global management of the welding cycle:
the control of the current, the voltage,
the wire speed, the gases flow,
the magnetic oscillation and the welding speed.

An optional AC module can be integrated to control the current for variable polarity aluminium welding.

	Characteristics
Duty cycle	450 A @ 100%
Pulsed current	1 to 100 Hz
AC current	50 to 200 Hz
Data exchange	USB
Primary power supply	3 x 230 V - 400 V - 415 V - 440 V / 50-60 Hz
Power consumption	22 kVA
Protection class	IP23
Weight and dimensions	270 kg 1200 (h) x 500 (w) x 850 (d) mm

Torches

High performance water cooled torches to ensure quality and stability of the process and its equipments.

Torches are equipped with quick connection systems for easy change and maintenance.

MEC4:

For TIG welding:
- 500 A at 100%,
- standard electrode easy to replace,
- twin HF ignition for better arc striking.

Options:
- gas trailing shield to protect welds of sensitive metals,
- magnetic arc oscillation equipment.

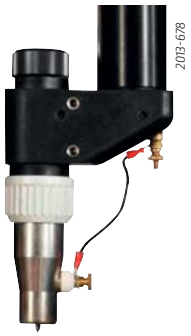

SP7:

This torch is the reference in the market, for soft and key hole plasma welding:
- 450 A at 100%,
- Standard electrode easy to replace and self-aligned,
- Cooled nozzle ensuring long life time of consumables.

Options:
- Gas trailing shield to protect welds of sensitive metals.

PLASMA gas

For thicknesses greater than 2.5 mm, PLASMA welding uses the Key-Hole technique.

If the arc is extinguished instantly, a hole remains in the workpiece.

In order to remedy this disadvantage on circular welding, and in order to make the hole disappear, it is necessary, before extinguishing the arc, to gradually reduce the torch's plasma gas flow simultaneously with the arc current. This made possible with a numerical valve controlling the plasma gas cycle.

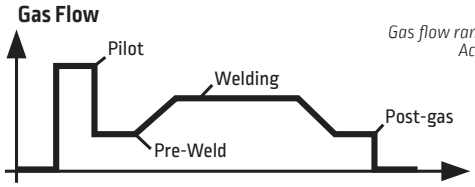

Gas flow range: 0 to 10 l/min
Accuracy: 0.1 l/min

Wire feed device

It is often necessary to feed the molten pool with metal during the welding operation in order to prevent the seam from showing hollows, to supply soft steels with deoxidizing elements and for succesive seams.

The system allows to quickly and accurately adjust the wire impact point in the welding pool thanks to micrometer slides.

The adjustment can be manual or motorised for remote control.

	Characteristics
Carbon steel Stainless steel Titanium wires	Ø 0.8 / 1.0 / 1.2 mm
Aluminium wire	Ø 1.2 / 1.6 mm
Max wire speed	6 m/min

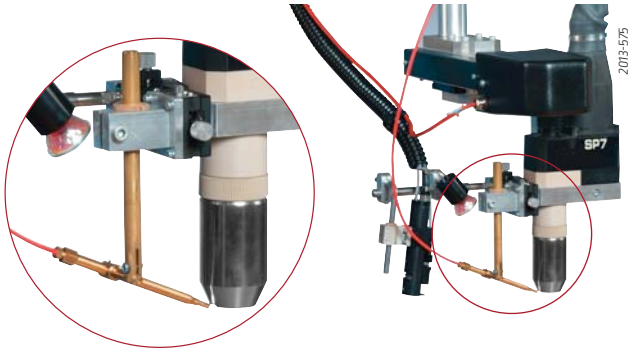

AVC system

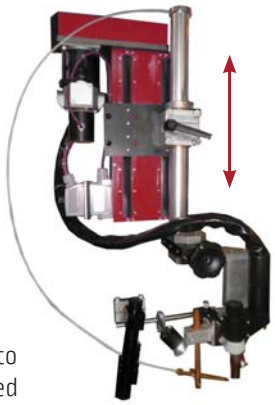

A constant distance between the torch and the workpiece is a key of quality to ensures a constant penetration and bead width.

The **Arc Voltage Control** (AVC) keeps this constant distance by automatic regulation of the arc voltage: function fully integrated into the Lincoln Electric system composed of an electrical vertical slide travel 200 mm.

Oscillarc plus

Arc deviation

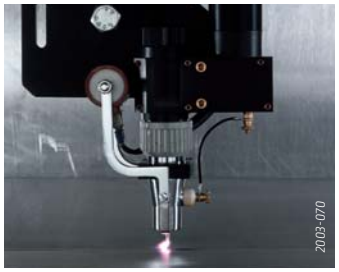

This technique is used to electrically deflect the TIG arc forward in the welding axis, increasing the speed by 30 to 50% for thicknesses of less than 2 mm.

Arc oscillation

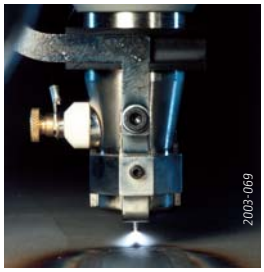

Arc oscillation is used to deposit metal over areas up to 15 mm wide to fill bevels or reconstitute surface coating.

Video camera

The TIG/plasma video system **VISIOARC VA2** can be easily integrated. It uses a greatly enlarged image which enables the precise position of the welding torch to be viewed thus making the operator's work easier and improving the quality of the welding operation.

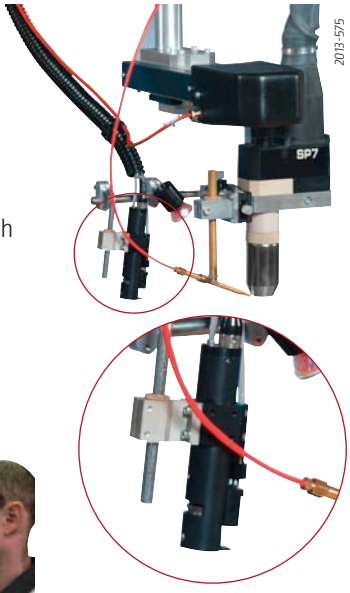

System with large color screen 15", miniaturised camera and additional lighting

Cooling unit

The **FRIOJET 300 W** cooling unit is compact with coolant constant supply, in closed circuit, used to cool down torches.

Water circulation in closed circuit makes it possible:

- To prevent the deposit of boiler scale in conduits and in the torches to be cooled,
- To save water, to have a constant water flow-rate,
- The regulation of water temperature provides a constant production quality and extends significantly useful life of torches and of wearing parts (steady temperature).

	Characteristics
Primary supply *	230 V / 1 ph / 50 or 60 Hz
Nominal water flow rate	0.26 m3/h
Nominal water pressure	5.5 bars

** directly supplied by power source NERTAMATIC 450*

Cooling unit equipped with display of temperature and control of return flow plus coolant level.

Hot wire

Productivity improvement by increasing the deposition rate

For filling bevels 40 mm deep, the use of hot wire provides a good solution and is particularly suited to applications where a high specification of the welded joint is required. This special technique uses an auxiliary current to bring the end of the wire to near its melting point.

Viable for plates of thickness 10 mm and above, the use of hot filler wire enables 2.5 to 3 kg of metal to be deposited per hour for filling bevels using multiple passes or for quality hard-surfacing:

- Additional power source for the hot wire current between 60A and 120A,
- No additional wire feed thanks to direct connection on the cold wire system.

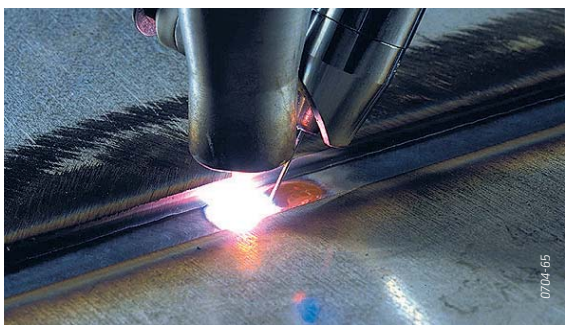

WELDING IN LINE PIPE INSTALLATION

Applications

Lincoln Electric proposes solutions for in line pipe welding to be integrated into pipe mills:

- Monocathode installation with MEC4 TIG torch for tube thickness 0.5 to 3 mm,
- Monocathode installation with SP7 plasma torch for tube thickness 2.5 to 8 mm,
- Tricathode installation with E16 torch for tube thickness 0.5 to 1.5 mm,
- Tricathode installation with E25 torch for tube thickness 1 to 3.5 mm,
- Tricathode installation with combination of TIG + PLASMA + TIG torches for tube thickness 2.5 to 8 mm.

Piping: Chemical, Petrochemical, Nuclear power industry, Boilers and heat exchanger, Off shore, Cryogenic, Shipbuilding, Military and Aeronautic...
Structure: Industrial building, Commercial center...
Ornemental: Door, Windows, General railing, Furniture, Decoration...

Typical performances

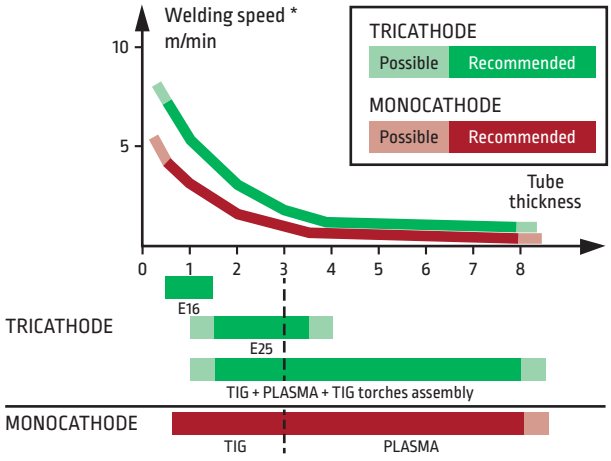

* Welding speeds are indicative and depend on the material, the quality required, and the quality of the pipe mill.

TRICATHODE process

TRICATHODE welding consists of a sequence of three dual-flow TIG processes using a special welding torch. The first arc is fitted with an electromagnectic arc deviation device.

Compared to other welding process used for this type of fabrication, Lincoln Electric's TRICATHODE process is of particular interest in terms of performance flexibility, investment/ performance ratio and operating costs.

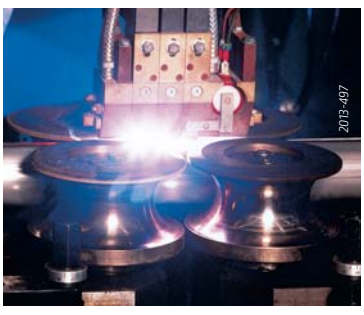

Tricathode Dualgas flux process:

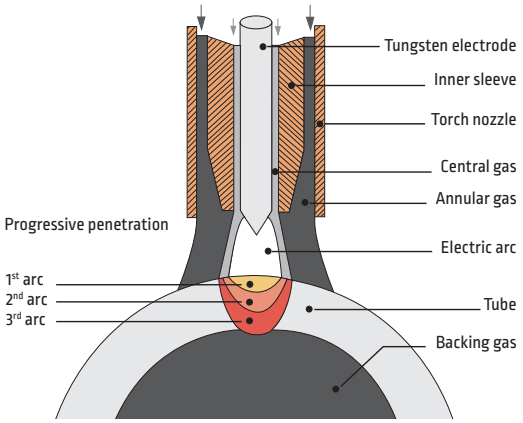

MONOCATHODE

MEC4 or SP7 torches

TRICATHODE

TIG + PLASMA +TIG

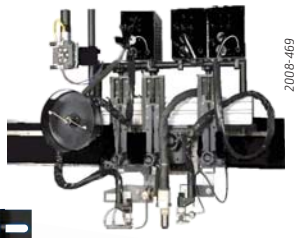

E16 torch

E25 torch

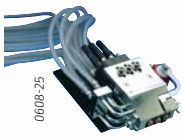

PERFORMANCES

Monocathode MEC4 or SP7

Package dedicated to TIG or plasma process without wire feed device and arc voltage control, the pipe line machine assuring a constant arc height.

Main components of the package:

- Power source 450 A at 100%, smooth current welding,
- MEC4 TIG torch or SP7 plasma torch,
- Remote control,
- HF starting unit.

SP7 plasma torch

- 450 A at 100%
- Typical application (wall thickness): 2.5 to 8 mm

MEC4 TIG torch

- 500 A at 100%.
- Typical application (wall thickness): 0.5 to 3 mm.

Tricathode

The basic system consists mainly of:

- 3 x power sources NERTAMATIC 450 Plus,
- 450 A each at 100%, smooth or pulsed current welding,
- Control panel with current control, digital voltage and current displays for each arc, adjustment and displays of gas flow setting,adjustment of electromagnetic arc on first electrode,
- Torches interface including HF source,
- Welding head mounting assembly.

E16 torch

- Implements the dual flow tricathode process.
- 200 Amp per electrode (total 600 Amp).
- Independant adjustment of each electrode to the shoe (one piece design).
- Electrode tungsten Ø 2.4 mm and 3.2 mm.
- Typical application (wall thickness): 0.5 to 1.5 mm.

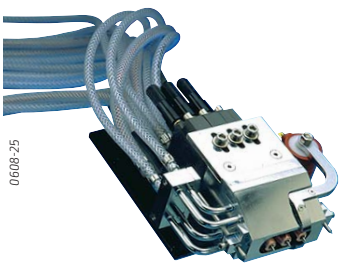

E25 torch

- Implements the dual flow tricathode process.
- 400 Amp per electrode (total 1 200 Amp).
- Independant adjustment of each electrode to the shoe (one piece design).
- Electrode tungsten Ø 3.2 and Ø 4 mm.
- Typical application (wall thickness): 1 to 3.5 mm.

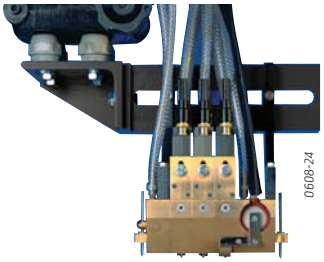

TIG + PLASMA + TIG welding head

- Two MEC4 TIG torches.
- One SP7 plasma torch.
- Independant adjustment on each torch.
- Typical application (wall thickness): 2.5 to 8 mm.

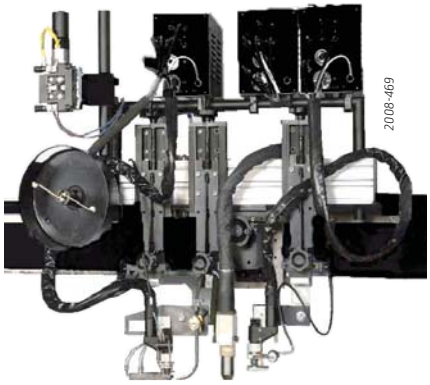

TOPTIG

Applications

TOPTIG process is a major innovation in the world of automatic welding. Developed in the Lincoln Electric research center, **TOPTIG** is a new process development from arc welding classical solutions. This new process can be used effectively on carbon or stainless steel plates up to 3 mm or on galvanized sheets with weld brazing.

The activities sectors are:

- Automotive subcontracting,
- Fine boiler making,
- Metal furniture,
- Aeronautics subcontracting.

Process

TOPTIG allows a better accessibility for welding complex structures. It offers very good performance concerning speed, and quality (spatter free).

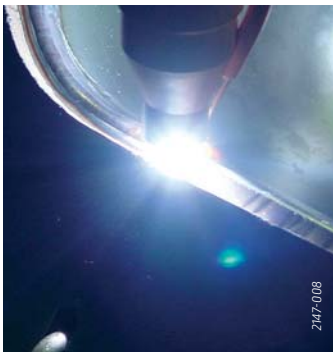

Installation

Lincoln Electric offers two types of **TOPTIG** installation with flat or pulsed current. It can drive a constant or pulsed wire feed which is synchronized with the welding current.

TOPTIG 220DC

TOPTIG 220 DC supplies 220 A at 100% duty cycle. The RC-JOB permits a complete welding cycle to be programmed. Program selection and chaining is carried out by analog signals.

TOPTIG innovative process principle

In TIG automatic welding mode, the filler wire is fed into the weld pool in front of the torch. In the TOPTIG process, the filler wire is fed through the welding nozzle in the area where the temperature is the highest. The wire therefore melts into small droplets exactly as in the MIG process. The use of a pulsed current synchronized with wire gives better control over the welding operation.

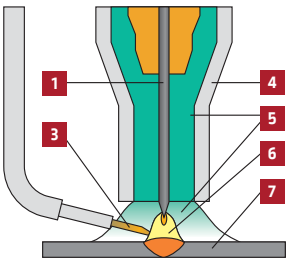

TIG process

- 10 000 à 16 000 °K
- 4 000 à 10 000 °K

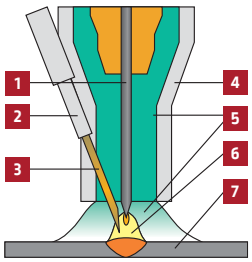

TOPTIG process

1 - Electrode
2 - Wire guide
3 - Filler metal
4 - Nozzle
5 - Shielding gas
6 - Arc
7 - Base metal

Torch accessibility

Compared with a traditional automatic TIG torch, the compactness of the wire lead-in incorporated into the nozzle gives accessibility at an angle comparable with that obtained using a MIG/MAG torch.

This increases the scope for robotization and extends the range of workpieces which can be welded automatically.

TOPTIG NERTAMATIC 450 PLUS

NERTAMATIC 450 Plus supplies 450 A at 100% duty cycle. The console permits a complete welding cycle to be programmed. Program selection is carried out by binary code, and program chaining by pulse. Torch capacity limited to 350 A at 100% using a water cooled nozzle.

MICROPLASMA

Manual and automatic welding applications

For the manual or automatic assembly of thin precious metals in the thickness range: 0.05 - 1.0 mm (stainless steels, Inconel, titanium, silver and gold alloys). For the electric and electronics components industries, small containers, metal filters and tool repairs as well as sectors of the horology, goldsmith and medical industries.

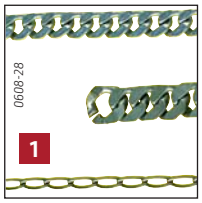

1 - Jewellery

2 - Fine sheet metal work

3 - Small containers

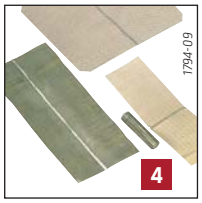

4 - Filters

Installation

PLASMAFIX 51 Characteristics:

- User friendly front panel,
- Multilingual display,
- Programmable welding cycles,
- 100 programs memory,
- Configuration adapted to the user's needs,
- Program print out,
- Also for TIG welding,
- Equipped of RS 232 for coupling a P.C or printer,
- Cooling by a liquid,
- Tungsten electrodes: Ø 1.0 or 1.6 mm, 75 or 150 mm long.

Installation with cooling unit on trolley

Options

- **Welding lathes**
  Precision circumferential machine for microplasma and TIG welding.

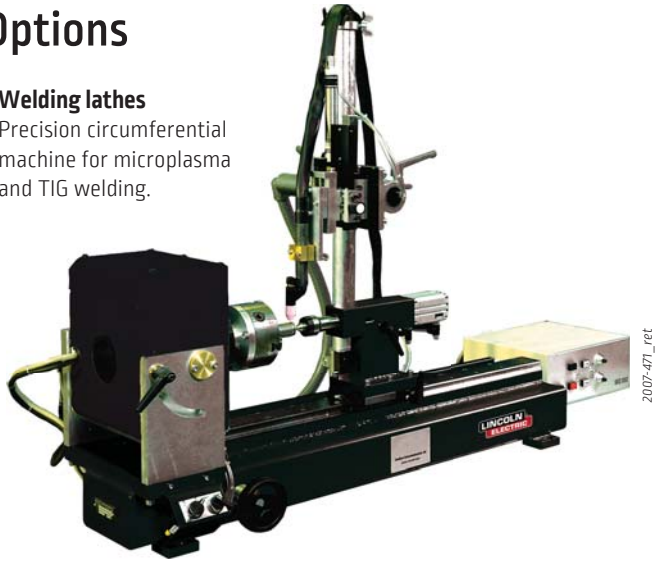

- **Double welding command pedal** (replaces the torch'trigger)
- **Trigger and current adjustment pedal**
- **Torch maintenance box with set of wear parts**

- **Trolley**
  Able to receive the PLASMAFIX 51 power source, the cooling unit and two gas bottles.

Torches

Two types of torch for use in manual or automatic mode:

SP45 automatic

SP45 manual

An SP20 manual or automatic torch can be supplied.
This weights considerably less and has a maximum current rating of 20 A at 100%.

Plasma / TIG machines

The Plasma/TIG applications are multiple and varied, here some examples of machines which answer to the main customer needs.

Assembly of flat sheet metal and closure of vessel sections

Seamer bench for longitudinal welding.

The vessel is welded by plasma/TIG or plasma + TIG process inside the INTER seamer bench.

The operator can see the joint and adjust the position of the torch thanks to a video camera device.

In/Out feed tables for material handling to aid production.

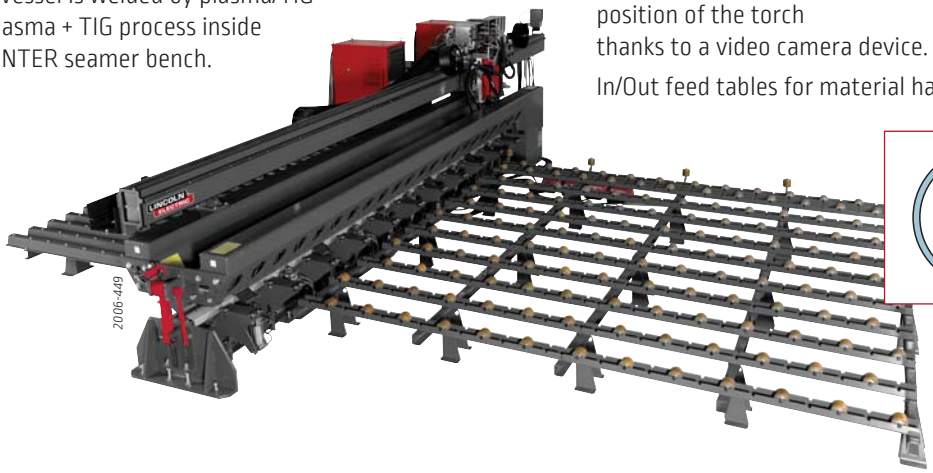

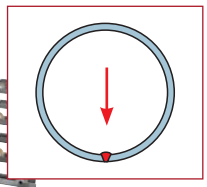

Assembly of vessels by conventional technique

Column and boom with rotators for circumferential welding.

To assemble 2 vessels, it's possible to put them on rotators and the plasma column and boom carries out the circumferential welding.

Safety and operator comfort are guaranteed thanks to the control of the welding operation from the ground.

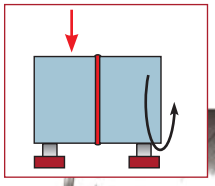

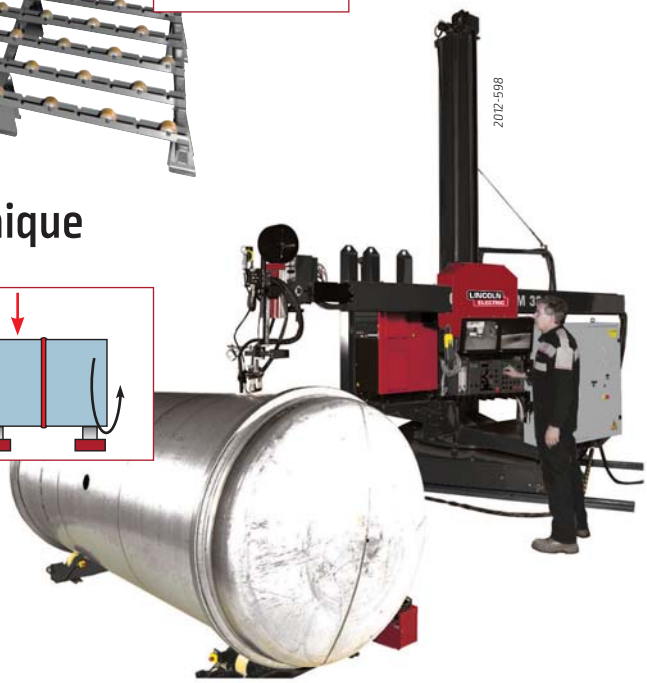

Assembly of vessels in vertical position

This technique is used mainly for large diameter vessels or products whose rigidity is low (ratio diameter, thickness, dimension).

The vertical assembly facilitates the handling of workpieces and reduce tooling needed.

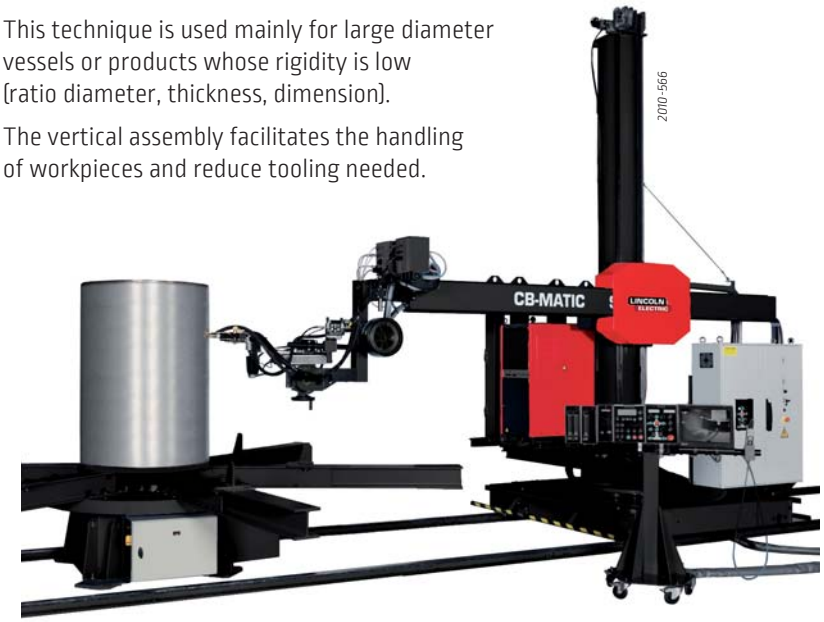

Column and boom with turntable
for longitudinal and circumferential welding:

- Longitudinal in vertical down position,
- Circumferential in cornice position.

Pipe prefabrication assembly

Mechanisation machine with plasma process and HPW control to weld pipes with elbows and flanges.

The work piece is positioned on the X-rotators and the motorised headstock carries out the rotation.

Elliptical tank

The plasma torch movement is controlled by the column and boom.

The Headstock HLM+F allows the rotation of the tank and ensures a high flexibility for the mounting and the holding of the piece.

Pipe production fully automated process

Complete welding system with:

- Column and boom equipped with plasma + TIG process for external longitudinal and circular welding.
- Fixed internal boom equipped with TIG head for internal remelting.
- Pipe holding device with rotators on carriages to turn and move the pipe.

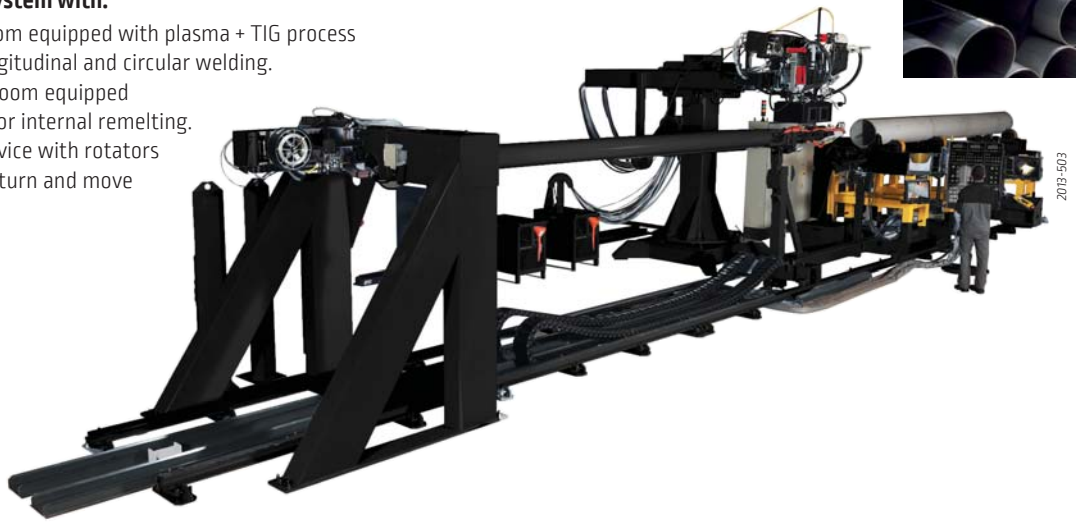

SAW MACHINE RANGE

The **SAW equipments** are used in various segments from the simple head for any autonomous installation to complete welding systems for infrastructure, energy and piping industries.

Lincoln Electric developed turnkey solutions for the main applications we can found in these sectors of activity.

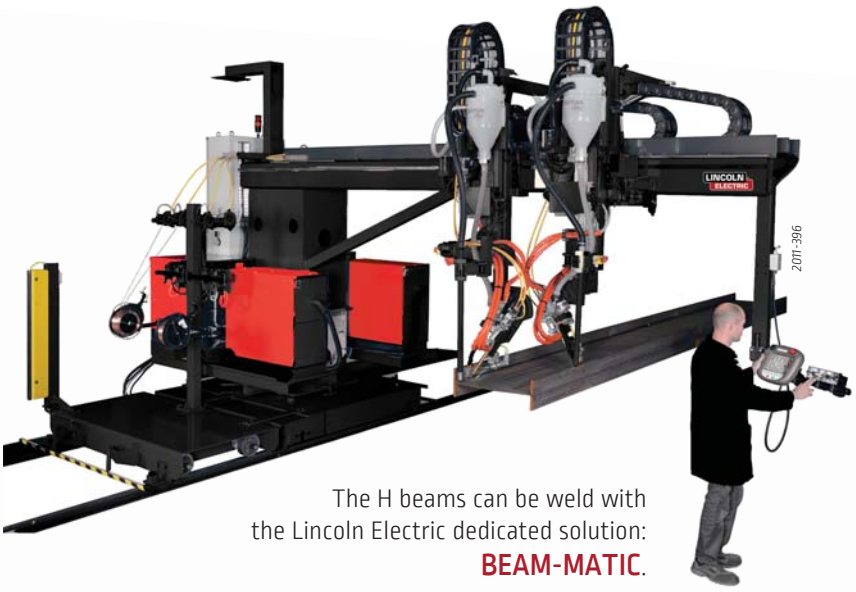

The H beams can be weld with the Lincoln Electric dedicated solution: **BEAM-MATIC**.

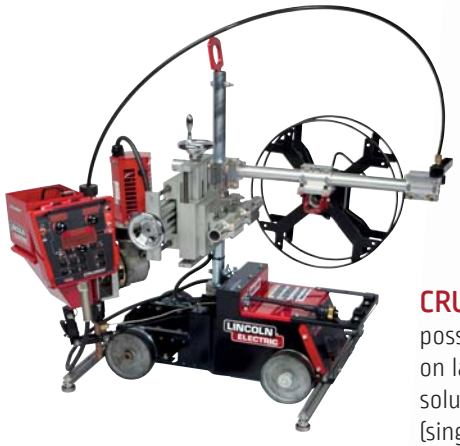

CRUISER SAW carriage offers the possibility to weld in restricted area and on large pieces. It is the ideal economical solution for welding on site or in workshop (single arc or tandem arc version).

The **Autonomous SAW head** can be combined with all external support.

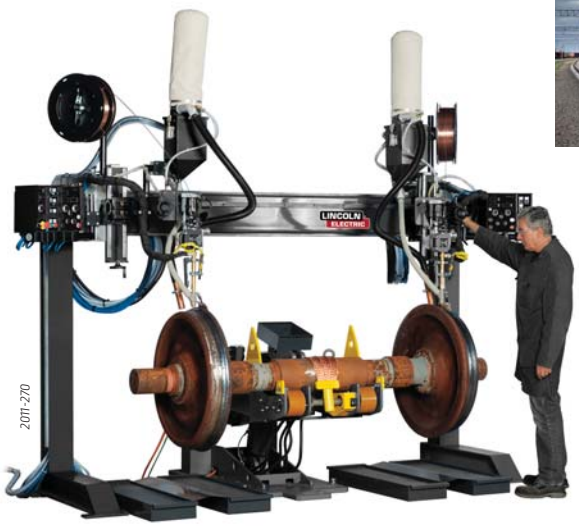

Some dedicated platforms exists as the **wagon wheels cladding** applications.

2012-582

Internal welding boom allowing the longitudinal and circumferential welding of pipes.

Weld the I-beams in vertical positions, without tacking thanks to the **T-MASTER solution**.

2015-370

2014-137

Multiple arc heads allowing to increase productivity in the longitudinal, helical and circumferential of pipes.

2010-311

Lincoln Electric has solutions for **Windmills** applications thanks to the heavy duty SAW Column and booms and rotators.

2011-245

2356-053

2013-484

The **Lamp post machine** allows to increase of productivity in this very competitive segment.

SAW SUBMERGED ARC WELDING INSTALLATION

Applications

Process for welding and hard surfacing of low alloyed carbon steel, stainless steel and refractory steel.

It combines productivity, quality and operator comfort.

It is used in thicknesses from 3 to 300 mm and provides a high welding speed and high deposition rates.

With one or more wires, it is found in many industries: infrastructure, shipbuilding, offshore pipe mill, heavy duty pressure vessels, energy...

SAW process and performances

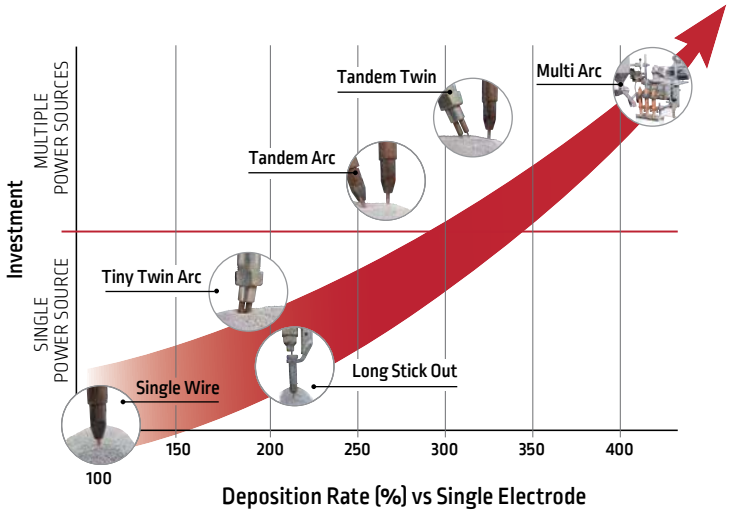

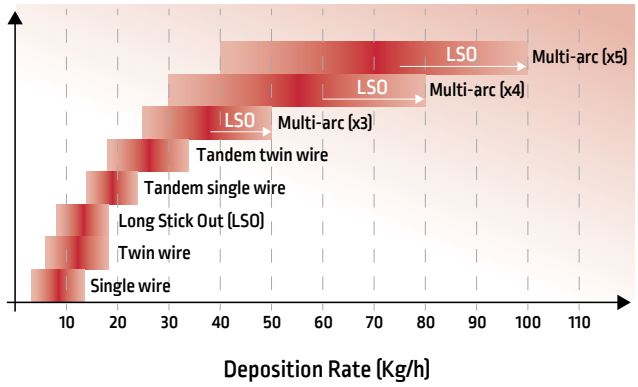

(Values are indicative and depend on the material and the quality required)

AC current management

Complete management of the AC wave form with the control of the frequency, balance and offset for a maximum flexibility of production.

Control the penetration and geometry of the weld bead. Eliminate the effect of magnetic arc blow.

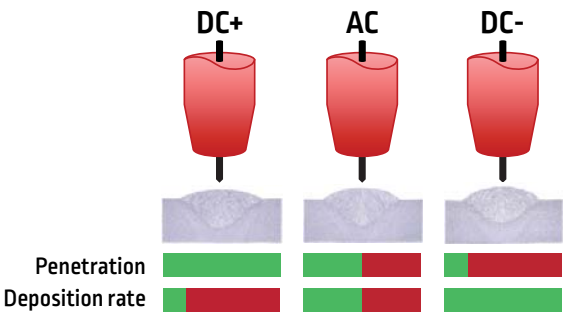

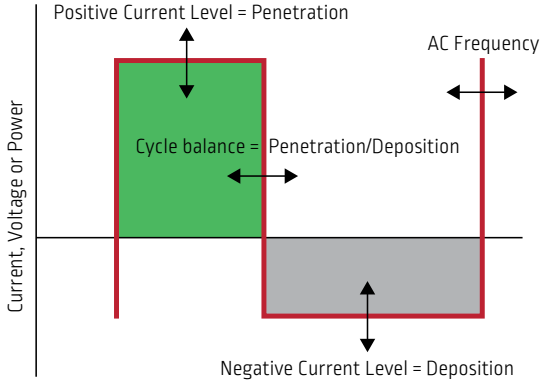

SINGLE ARC

TANDEM ARC

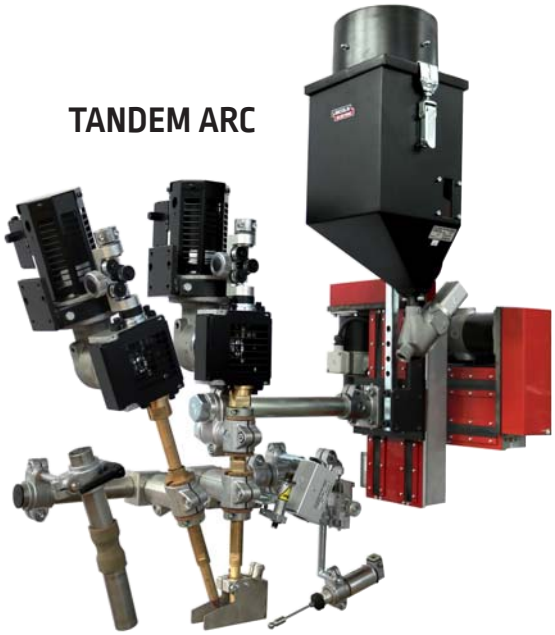

PERFORMANCES

SAW equipments: inverter technology Power Wave AC/DC 1000SD

The **Power Wave AC/DC 1000 SD** proposes a complete range of equipment combining performance, flexibility of use and ensuring high reliability in welding cycle management.

MAXsa 10: Mobile Console

The **MAXsa 10** associated to the **Power Wave AC/DC 1000 SD** allows to manage the main welding parameters for a total control of the Submerged Arc process.

- Selection of the polarity *(DC+, AC, DC-).*
- Selection of the mode *(CV or CC).*
- Selection of the wire material and diameter.
- Management of programs and memorization.
- Manual control of wire and flux feeding.
- Power Manager software to configure the installation.
- Production monitoring and CheckPoint software for a full traceability ot the welding data.

Remote control RC-MATIC

For immediate action throw push buttons, a remote control can be added to the **D2C SAW** welding system. Connected at the welding head throw a cable of 5 m, the operator can get the useful basic function of SAW head management. Fixation of the remote control is secured by a magnet.

D2C SAW: Digital Cycle Control

Power Wave AC/DC 1000 SD can be associated to **PLC controller D2C SAW** via analog interface *(MAXsa 10)* or via fieldbus protocol *(MAXsa 19)* for a complete management of the machine with the submerged Arc process.

The **D2C SAW** thanks a large color touch screen friendly to use is able to control all the devices linked to the welding as:

- All welding and positioning axes *(Column & Boom, Rotator, Positioner, ...).*
- Crossed slides of the head.
- Seam tracking, laser spot...

The welding monitoring during the cycle is facilated thanks direct manual controls *(joystick and encoder buttons...)*
D2C SAW is easy to adapt for a particular request or specific cycle needed for the final customer application.

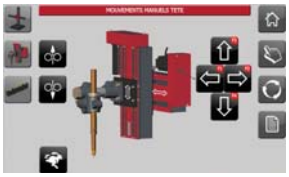

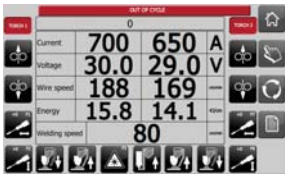

SAW INVERTER POWER SOURCES

Lincoln Electric offers inverter technology for DC and AC SAW applications:

- Efficient power consumption reducing operating costs,
- High duty cycle: 1 000 A at 100% (40 °c),
- Easy to integrate from conventional interface to digital unit,
- Multi-purpose installation:
  - CV: Constant Voltage,
  - CC: Constant Current.

A second model of DC power source can be associated with MAXsa 10: **FLEXTEC 650X**.

	POWER WAVE AC/DC 1000 SD	FLEXTEC 650X
Power supply (3x 50-60Hz)	380-400-460-500-575 V	380-460-575 V
Effective power at 100%	55 kVA	46 kVA
Current range	100-1 000 A	40-650 A
Duty cycle at 100%	1 000 A / 44 V	650 A / 44 V
Weight	363 Kg	75 Kg
Dimensions L x l x H	1 248 x 501 x 1 184 mm	745 x 410 x 554 mm
Protection index	IP 23S	IP 23

POWER WAVE AC/DC 1000 SD

FLEXTEC 650X

Power Wave® Software Solutions

Power Wave Manager

- Check the status of every component in your welding system.
- View and easily adjust the information associated with your welding operation.
- Setup the configuration of the differents components of the welding installation.
- Display of all real-time measurement values like voltage, ampere, wire feed speed, torque.

CheckPoint™: Welding Production Monitoring

CheckPoint's secure, cloud-based access allows key stakeholders to view and track welding operations anywhere in the world, on any device:

- Track real-time weld production data 24/7.
- Create custom custom alerts and notifications.
- Operator Arc on Time.
- Material Consumption.
- Weld and Assembly Information.

Production monitoring™

Production monitoring monitors a lot of information for the management of the customer production.

- Current status and shift analysis.
- Weld listing and downtime analysis.
- Monitoring by Weld ID, Employee ID or Consumable Lot ID.

Weldscore™

Allows you to score each weld based on a trained sample of acceptable welds.

Great for:

- Expanding quality control capabilities,
- Training school monitoring, grading and final examinations,
- Critical welds with specific quality control requirements,
- Operator testing and certification programs or Consumable Lot ID.

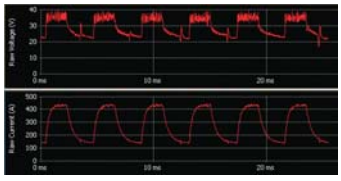

SAW DC MULTI-PROCESS INSTALLATIONS

If an application requires pure welding power combined with multi-process power, then the **IDEALARC range** with smooth DC output is your best investment. Designed for Semi-automatic and automatic welding, the precise control of the **IDEALARC® DC 1000** provides superior MIG, flux-cored, submerged-arc welding and excellent air carbon arc gouging with up to 16.0 mm diameter carbons.

The **IDEALARC® DC 1500** is a multi-process DC arc welding power source for automatic welding applications. It produces outstanding arc characteristics on both constant voltage and constant current processes for great welding versatility from a single power source.

IDEALARC® DC 600

IDEALARC® DC 1000

IDEALARC® DC 1500

	IDEALARC® DC 600	IDEALARC® DC 1000	IDEALARC® DC 1500
Power supply (3x 50-60Hz)	220-380-440 V	380-440 V	
Effective power at 100%	44 kVA	74 kVA	121 kVA
Duty cycle at 100%	600 A / 44 V	1 000 A / 44 V	1 500 A / 44 V
Weight	237 Kg	372 Kg	644 Kg
Dimensions L x l x H	988 x 567 x 781 mm	991 x 567 x 781 mm	965 x 566 x 1 453 mm

NA-3 & NA-5 Control & Heads

Improve productivity with the **NA-3S** or **NA-5** automatic wire feeders. These systems have been specially designed to deposit more weld metal at faster travel speeds which eliminates bottlenecks and cuts costs.

NA-3S

Features

- Solid state controls allow precise control of welding procedures, striking characteristics, as well as bead size and shape.
- Easily adjusted for a wide range of processes, feed speeds and wire sizes.
- Compact units with excellent flexibility to fit into simple fixtures or the most complex automated production lines.
- Rugged construction minimizes downtime and maintenance costs.

NA-5

NA-5F head

SAW EQUIPMENT

SAW welding head

Lincoln electric offers a large range of welding heads from standard to special models for a perfect adaptation to the customer application.

Standard tubular head

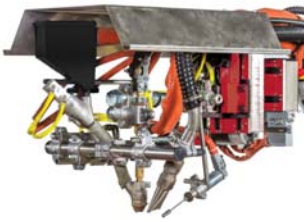

Compact tubular head

Internal head

Narrow gap head

2012-641

Seam tracking

TRACKMATIC device guarantees the good positioning of the torch in the joints to be welded without operator intervention.

A sensing probe finger or an inductive or laser sensor allows joint tracking (height or alignment) and commands the necessary corrections required to the torch trajectory thanks to motorised slides travel 100 - 200 or 500 mm.

Whilst increasing productivity, it ensures a constant weld quality, a reduction in repair operation and easier use for the operator.

Seam tracking with sensing probe

Seam tracking with inductive sensor

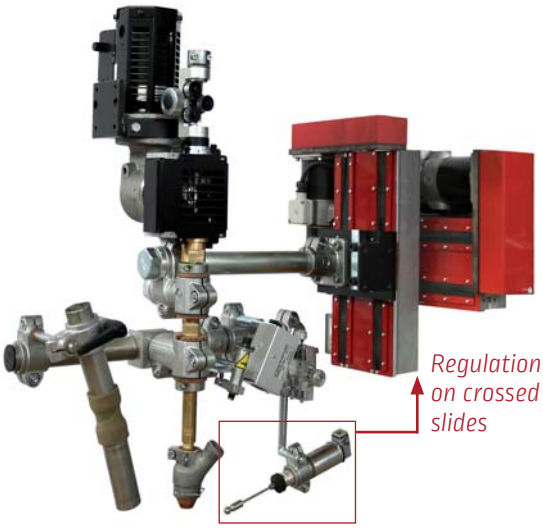

Seam detection

Video camera

Combined with a laser spot, the video camera unit allows to view the welding area and can remotely control the positioning of the torch in the joint.

This is an essential tool for welding in difficult acces area like inside a tank of small diameter.

The equipment is supplied with a spot light to Illuminate over viewed area, and a color LCD industrial screen high definition 15".

2008-312

2003-035

Laser spot

To show the wire point of impact relative to the joint on the workpiece. The spot projects an illuminated point in front of the electrode wire for guiding. One spot is used for horizontal alignment and the association of two spots make it possible to monitor the horizontal and vertical position.

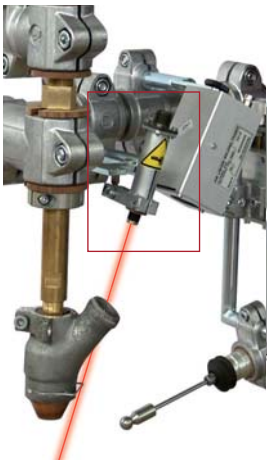

Flux management

Equipment to improve productivity and ensure operator safety.

Flux recovery equipment

A compact unit to significantly reduce manual refilling of the flux feed hopper 10 liters. Powered by compressed air. Pressure 4 to 6 bar. Venturi device completed with tank and filter cartridge for recovery and dust filtration.

Flux supply equipment

Pushed flux supply system providing a greater welding autonomy due to the flux tank capacity of 70l.

Centralised recovery

Centralised flux recovery system through pushed flux device and electrical turbine with filtration of flux dust. Ideal system for heavy duty application with reduced flux consumption and minimum flux handling. The system can be equipped with a device to keep the temperature of the flux up to 120 or 200 °C.

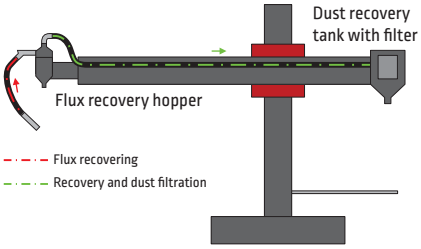

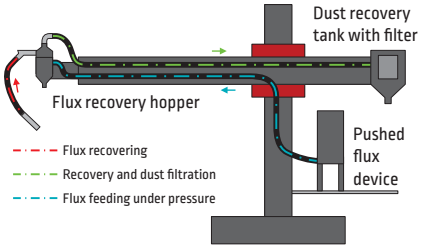

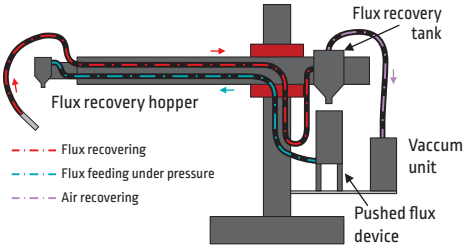

Wire management

Lincoln electric proposes optimized packaging solutons for submerged arc welding.
All wires are free from any organic component limiting the diffusible hydrogen contribution to the weld metal.

25 kg spool

100 kg coil

300 kg spool

1000 kg coil

Drums from 350 to 1000 kg

Drum accessories:

Turn table designed to dispense all sizes and grades of wire.
4-axis adjustable arm with ceramic inlet guide prevents wire shaving.
Quick disconnect allows for easy conduit connections.

The pneumatic Feed Assist provides an economical method to assist your wire feeder in moving wire through the conduit in applications where long conduit runs are necessary.

SAW NARROW GAP

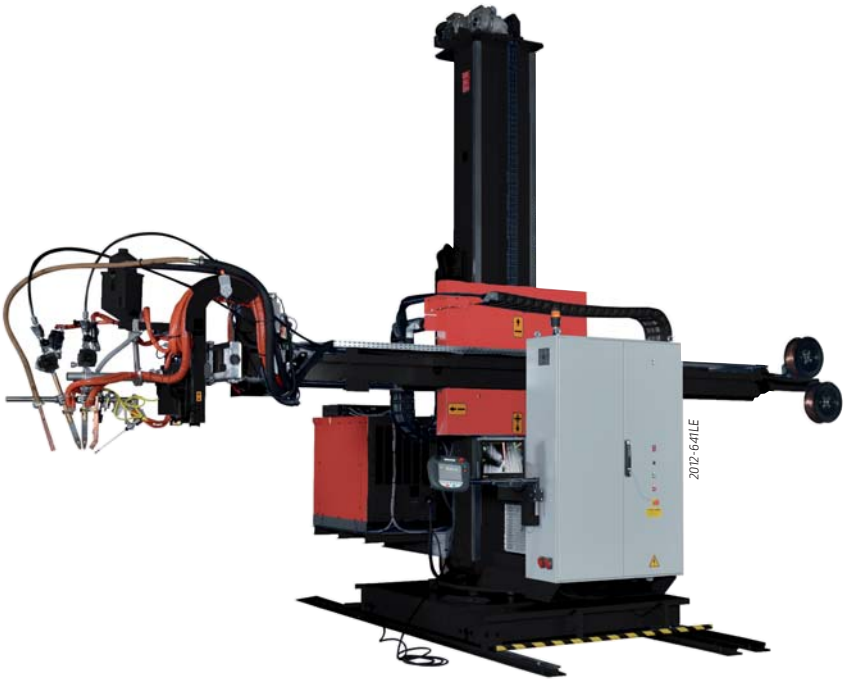

Applications

Narrow Gap process used for welding thick plates,
mainly for the following industrial applications:
Power Generation, Nuclear, Pressure Tanks, Windmill, Petrochemical.

Process

It is a Submerged Arc process with single or tandem narrow gap torch, designed to weld thick plate (generally over 50 mm) using practically parallel sides and narrow gap preparation.

Narrow gap process allows to increase productivity and to result in lower cost welding by decreasing the volume of metal needed and the welding time compared to conventional preparation with bevel.

The process is adapted for both longitudinal and circumferential welding.

Equipment: LINCOLN ELECTRIC provides a full range of equipment for every application

Example of modular tandem welding head proposed.

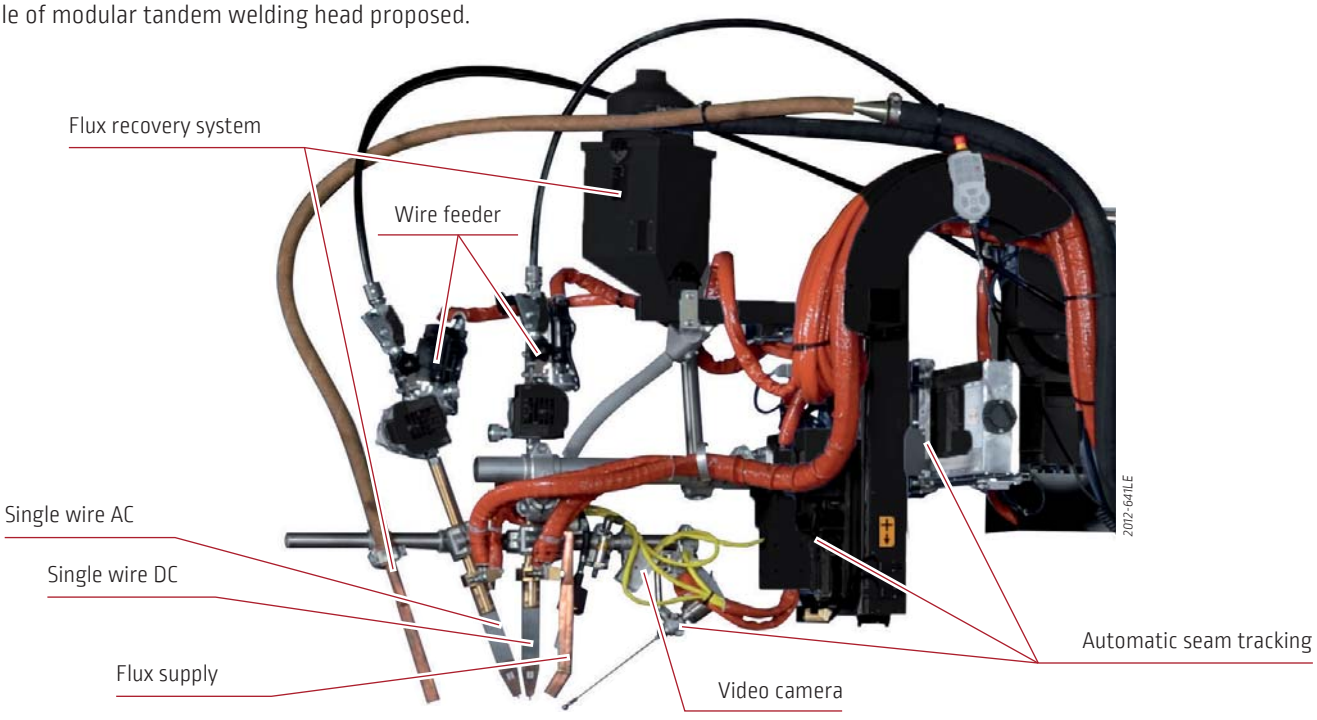

SAW MULTIPLE WIRES

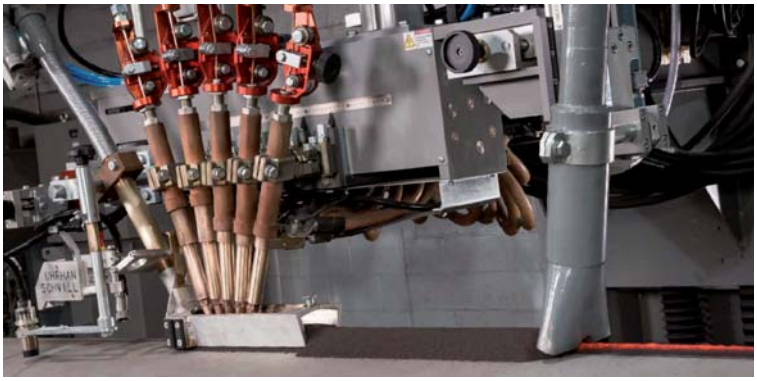

Uhrhan-Schwill SCHWEISSTECHNIK
A Lincoln Electric Company

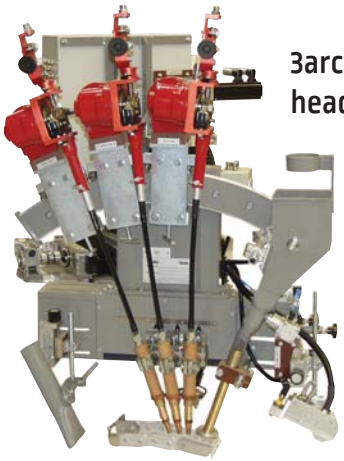

3arc welding head

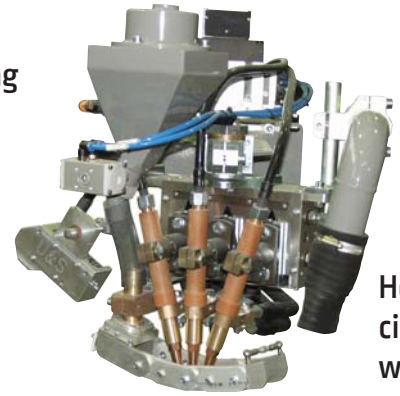

Helical or circumferential welding

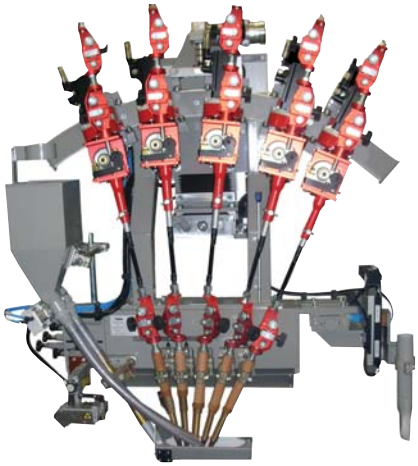

Longitudinal welding

PERFORMANCES

SAW MULTI-ARCS SYSTEM (heads and controllers)

The **Lincoln Electric** Automation proposes to integrate multiple wires head from Uhrhan & Schwill Gmbh company world-renowned specialist for Pipe Mills segment.

E5 system

The E5 system manages all the parameters of the multi-arcs welding and it can be associated to D2C controller for a complete management of the machine:

- Single arc, Tandem arc or triple arc,
- Long Stick Out process,
- Touchscreen based remote control,
- Management of programs and memorization,
- Manual control of wire and flux feeding,
- Display of all real-time measurement values like voltage, ampere, wire feed speed, torque.

Z5 system

The Z5 system manages the complete machine components and all the parameters of the multi-arcs welding:

- From single arc to multiple arc (x6),
- Long stick out process,
- Large touchscreen,
- Full control of wire and flux feeding system,
- Display and recording of all real-time measurement values like voltage, ampere, wire feed speed, torque, movement speed...
- Seam tracking by laser scanner.

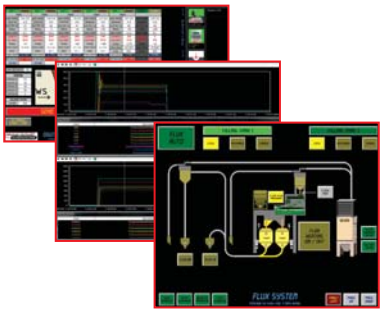

STRIP CLADDING PROCESSES

Cladding is a fundamental process in the pressure vessel industry and is applied across whole spectrum of applications, from Nuclear, Oil and Gas industries to Chemical Processing equipment and steelmaking.
Cladding is required on the process side of high pressure critical process plant equipment to provide corrosion resistance against highly severe corrosive service fluid or to increase wear resistance of a component being subjected to heavy wear and tear applications e.g. continuous casting rollers in steel mills.

Submerged arc strip cladding

- The arc causes more penetration into the base material, resulting in dilution levels of ~20%.
- Deposition rate : 12-14 kg/h for 60 x 0,5 mm strip.
- Current range restricted to limit dilution.

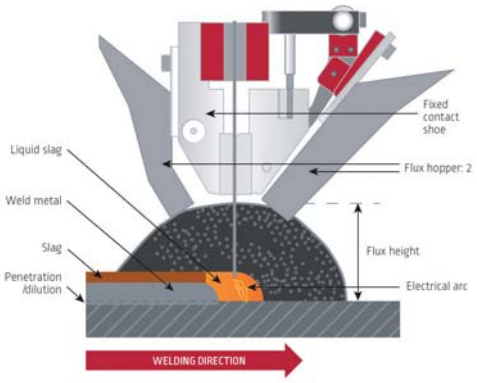

Electro slag strip cladding

Conventional

- Arc-less process, use conductive flux and works on Joule's resistance heating principle.
- The strip current passes through the molten slag. The resulting resistance heating effect melts the strip and deposits the molten weld pool onto the base material.
- Low dilution level (9 to 12%). Process has significant advantages over SAW.

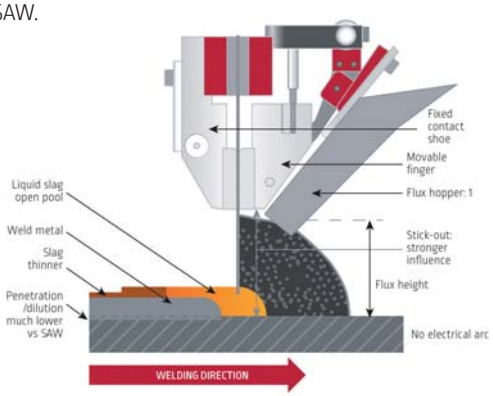

Hybrid Technique*

- Hot metal cored wires added to the molten pool as 3rd constituent.
- Always in single layer, coupled with high welding speed.
- Lowest dilution level coupled with the highest deposition and faster surface coverage rates.

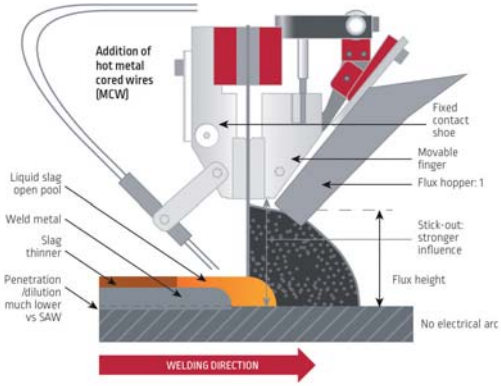

Comparison:

- Submerged arc (SAW).
- Electro slag conventional (ESW 2D).
- Electro slag hybrid* (ESW 3D).

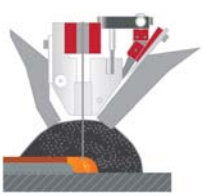

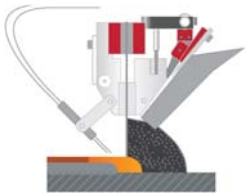

	Submerged Arc	Electro slag	
		Conventional	Hybrid*
Consumables	Strip + SAW Flux	Strip + ESW Flux	Strip + Metal Cored Wire + ESW Flux
Deposition rate (Kg/h) 60 x 0.5 mm strip	12-14	22-30	28-42
Welding speed (cm/min)	10-14	Normal speed: 15-18 High speed: 24-35	1
Minimum number of layer in Ni-625 to achieve <5% Fe chemistry	2	2	1
Flux type for high speed cladding in single layer	NA	Alloyed	Neutral

** Patent Pending*

Welding heads

- In-house designed heads for strip widths 15 to 120 mm.
- Water cooled and robust modular design.
- Power cables can be added as required.
- Easily oriented for desired welding direction.

Standard head

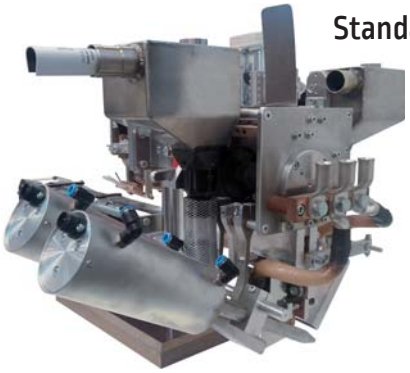

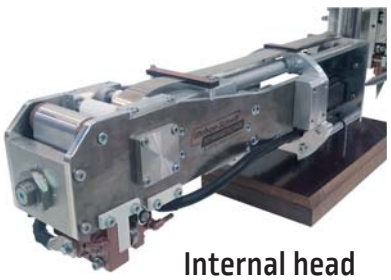

Internal head

E5 controller

- Management of the welding process with the E5 system and its mobile console.

SAW TRACTORS

LT-7 Tractor

LT-7 Tractor
Single or twin wire

The **LT-7 Tractor** is a self-propelled mechanized wire feeder, designed for submerged arc process with track system capabilities. It is self-guiding and easy to operate. For welds butts, horizontal fillet and lap joints to the left or right side of the tractor frame.

Features

- Travel speed from 0,12 to 1,8 m/min
- Wire diameters from 2,4 to 4,8 mm
- Wire speed from 2,5 to 10,2 m/min

Cruiser Tractors

The self-propelled modular **Cruiser** and **Tandem Cruiser** travel carriages can deliver deposition rates up to 13kg per arc per hour for butt and fillet joints on lengthy plate welding applications common in bridge or barge decking, large tank fabrication or shipbuilding. It is suitable for all those positions below.

Features

- Advanced control pendant.
- 3 or 4 wheels guiding.
- Travel speed from 0,25 to 2,5 m/min.
- Wire diameters from 2,4 to 5,6 mm.
- Wire speed from 0,4 to 12,7 m/min.

Cruiser
Single or twin wire

Flat butt welding

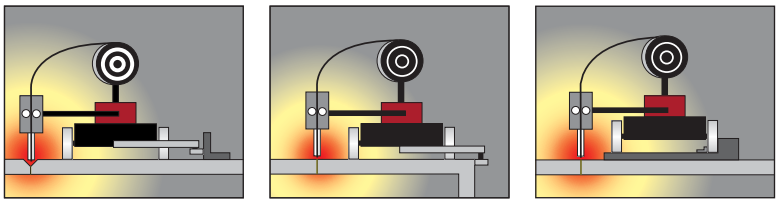

Fillet welding

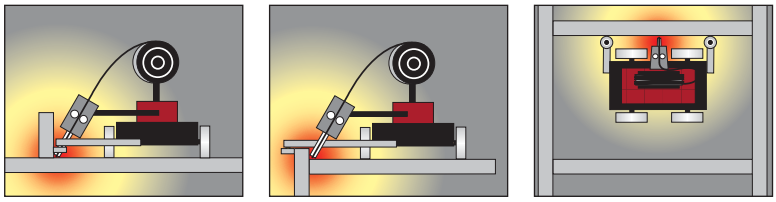

Circular welding of large vessels with ø over 1 600 mm

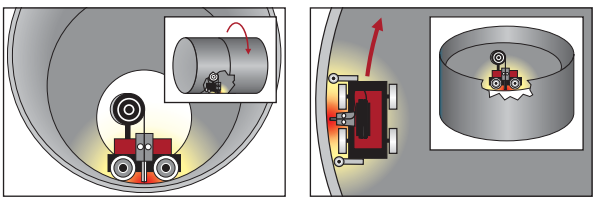

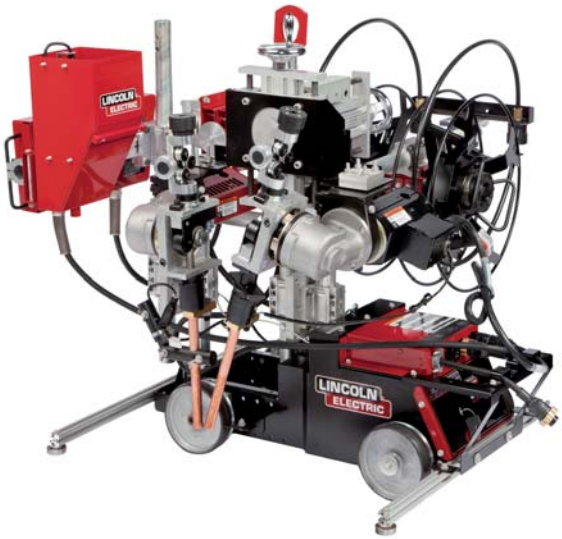

Tandem Cruiser
Single wire

SAW INTERNAL BOOM

Lincoln Electric can propose several solutions of internal boom welding.

The main processes are:

- Pipe manufacturing by internal longitudinal welding,
- Assembling of 2 pipes by circular welding.

Once the internal weld is done, the outside weld is performed by an other equipment.

The structure and configuration of the internal boom depends of the length of the pipes.

Pipes from 4 m to 12 m long.

2013-485LE

2013-485LE

Internal welding head with single wire, video and seam tracking.

2012-582LE

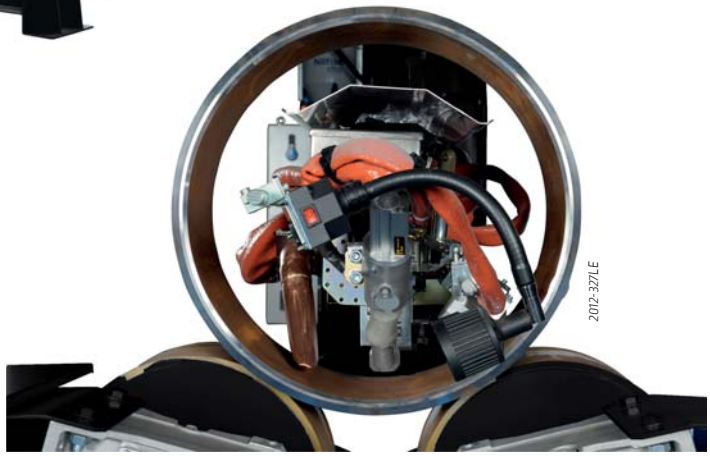

2012-327LE

BEAM-MATIC

The automation of long workpieces welding (beams, wagons, box section constructions) requires sophisticated machines which move on rails.

The **BEAM-MATIC** system is used to weld beams of constant or varying cross-section in widths between 220 and 2 000 mm *.

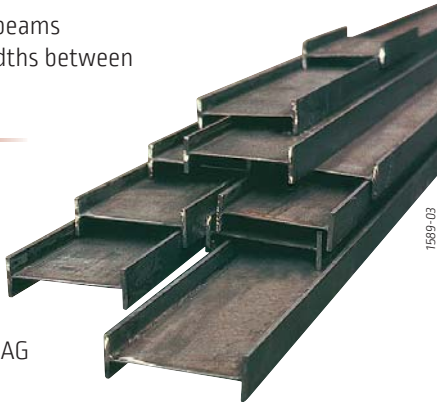
1589-03

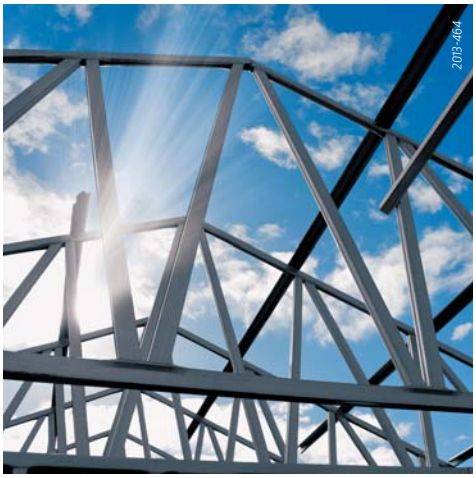
2013-464

** Other dimensions on request.*

2 types of **BEAM-MATIC** are available:

- Cantilever: CT,
- On base column and boom: LM.

The **BEAM-MATIC** allows to weld in MIG-MAG or SAW (single or twin wire) process.
In standard, the machine is equipped with a flux recovery device and a pushed flux supply.

Possibility to use wire spools or wire drums on the 2 **BEAM-MATIC**.

The torch level is fix on the **BEAM-MATIC CT** and it's possible to lift the torch level on the **BEAM-MATIC LM**.

BEAM-MATIC CT

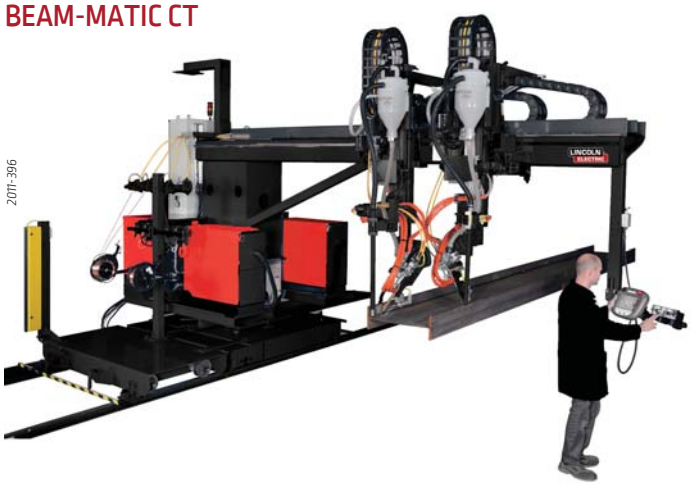
2011-396

BEAM-MATIC LM

2008-414

Clamping bench:

The clamping bench allows the positioning of the web and the flanges before the welding, with an additional clamping bench it's possible to save time and increase productivity.

Standard / Dimensions for clamping bench

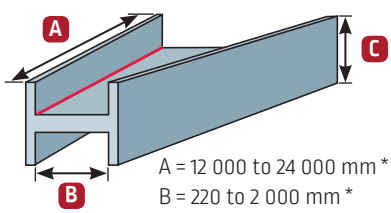

A = 12 000 to 24 000 mm *
B = 220 to 2 000 mm *
C = 120 to 500 mm *

Web thickness: 4 to 20 mm
Flange thickness: 10 to 30 mm

** Other dimensions on request.*

2009-524

T-MASTER

The **T-MASTER** "Big size beam welding line" is designed to weld with Submerged arc process the T and I beams with the web in vertical position without need of continuous tack-welding of beam. A short tack is only needed at the beam leading edge.

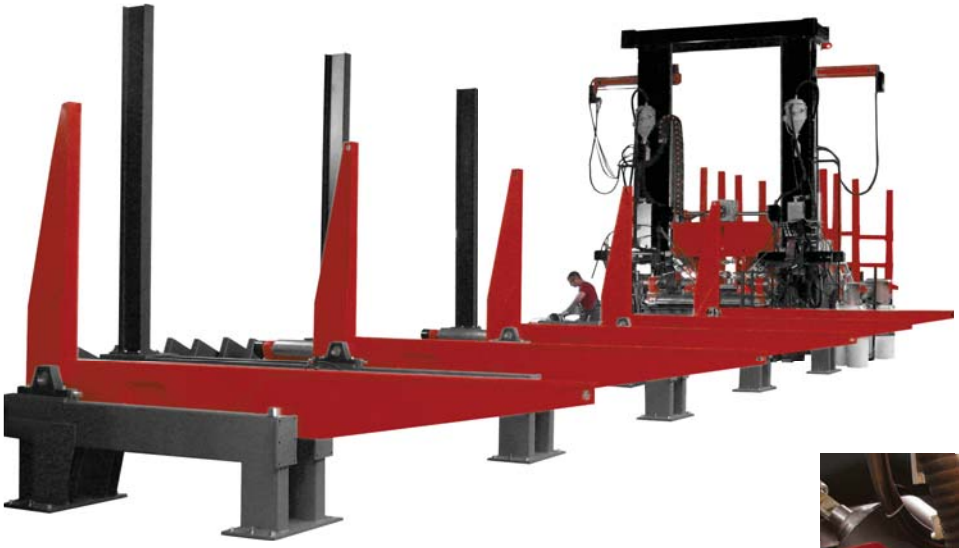

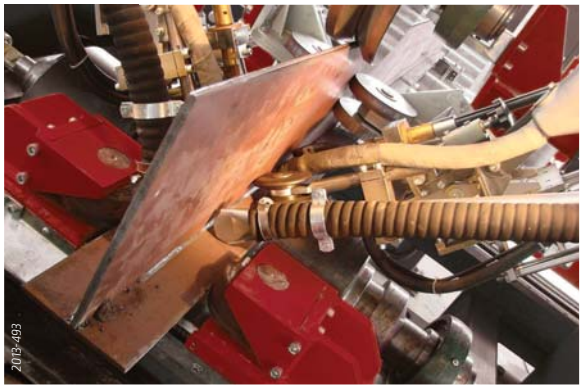

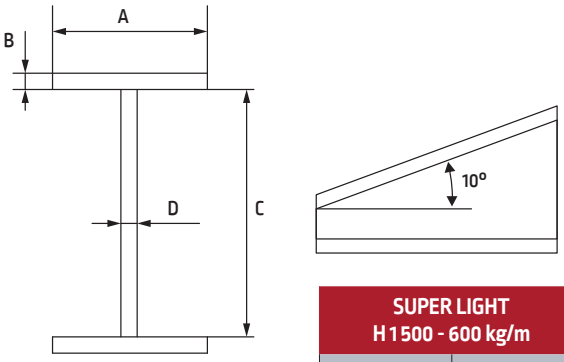

		SUPER LIGHT H 1 500 - 600 kg/m		LIGHT H 2 000 - 1 000 kg/m		MEDIUM H 3 000 - 2 000 kg/m		HEAVY H 4 000 - 3 000 kg/m	
		mini	maxi	mini	maxi	mini	maxi	mini	maxi
A: Flange length	mm	150	800	150	1 000	200	1 250	200	1 500
B: Flanges thickness	mm	5	30	6	40	8	65	8	80
C: Web length	mm	200	1 500	200	2 000	250	3 000	300	4 000
D: Web thickness	mm	5	15	6	25	8	30	8	40
L: Beam length	mm	6 000	12 000 *	6 000	12 000 *	6 000	12 000*	6 000	12 000 *
Weight / meter	kg / m		600		1 000		2 000		3 000
Taper angle	°		10		10		10		10

** additional length by 3 m*

** Other dimensions on request.*

WINDMILL SOLUTIONS

Working closely with engineering departments and major manufacturers in this sector, **Lincoln Electric** is constantly working to develop processes, equipments and consumables meeting the ever more demanding requirements of increasingly hostile environments.

This constant innovation has resulted in a complete range of equipment and consumable solutions specially designed for wind-power industries.

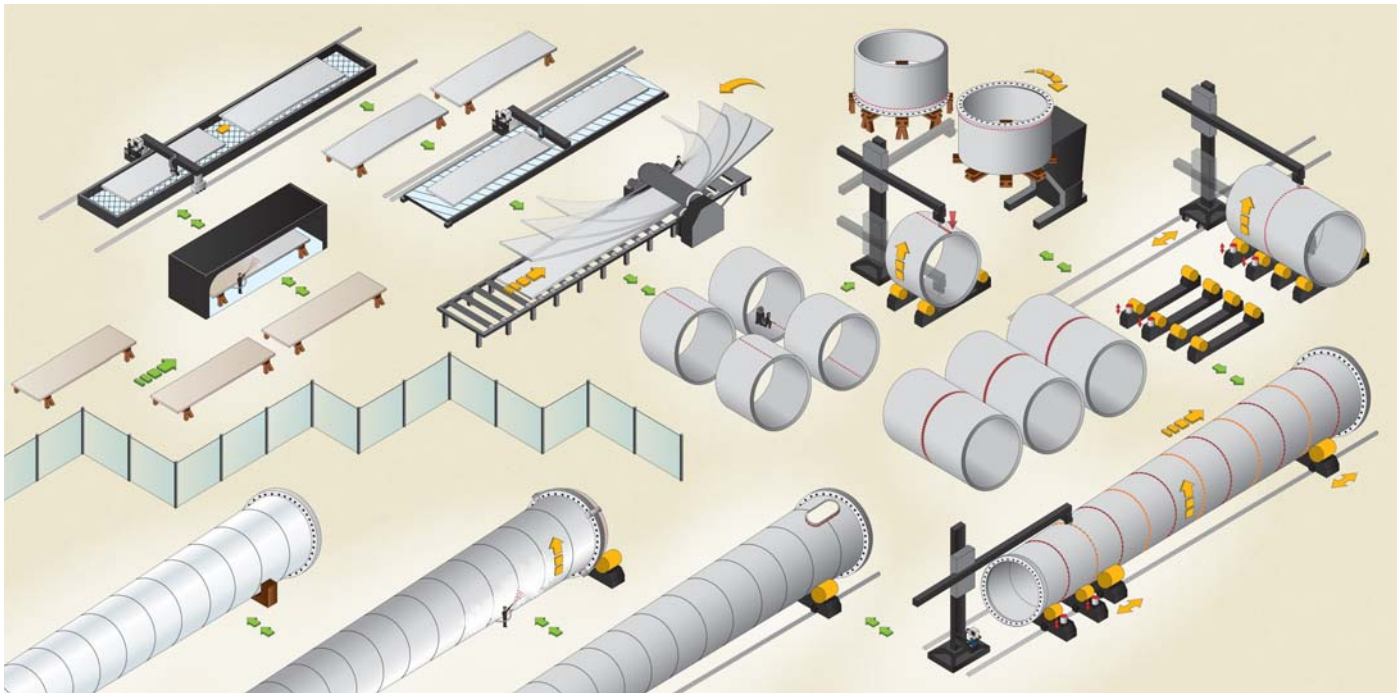

Example of layout for windmill towers fabrication.

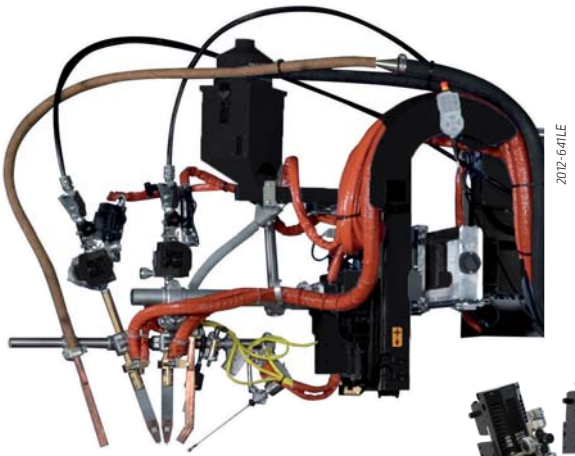

Heavy duty welding heads:
Narrow gap or SAW tandem head.

Large column and booms, rotators and positioners are proposed in this windmills solution.

LAMP-POST SOLUTIONS

High productivity performance machine equipped with SAW or Plasma welding process. No tacking of parts is required.

A dedicated software manages the lamp post production including automatic positioning of the pole edges before welding according to the various shapes and conicity of each product.

A burner ramp under the lamp-post reduces the welding distortions.

Several options are available on request.

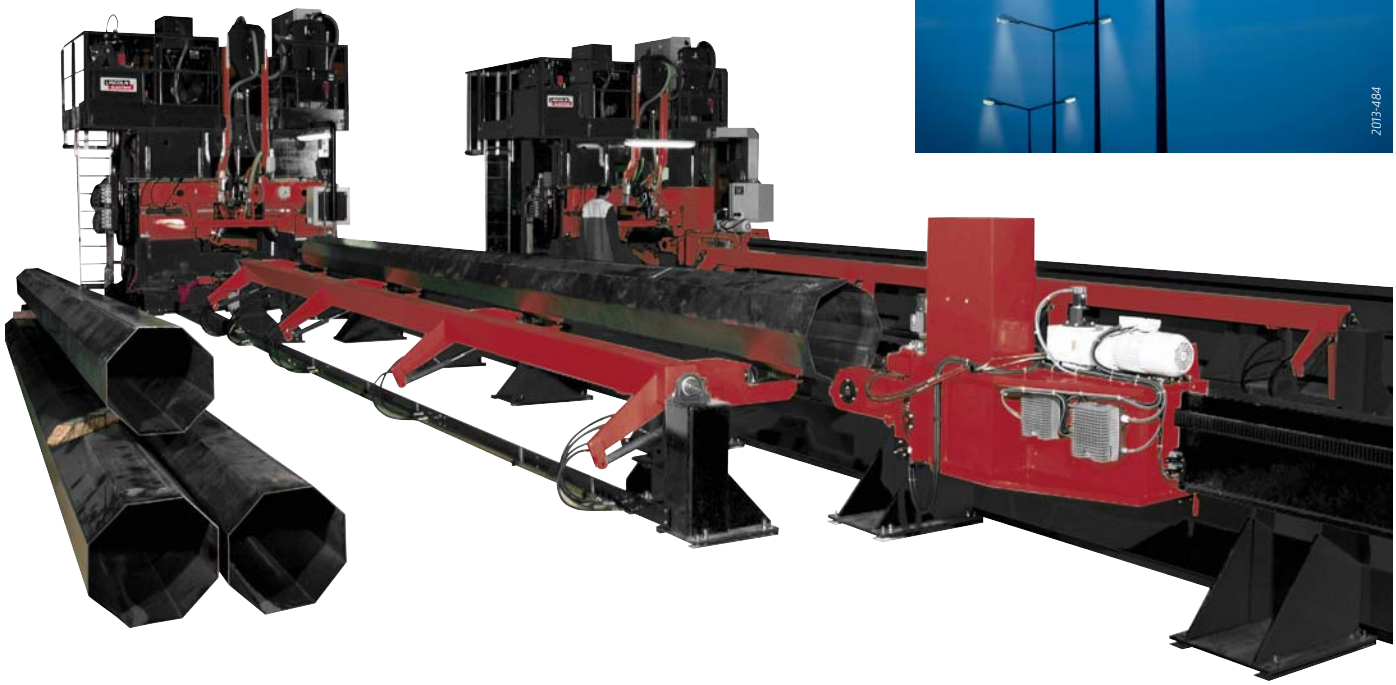

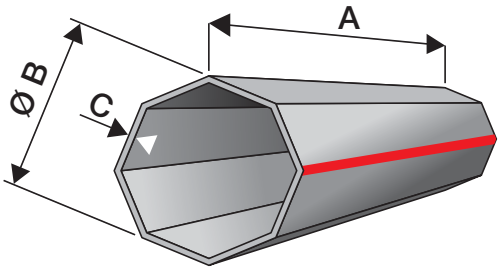

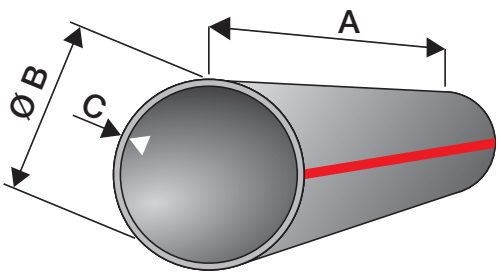

A: 3 to 17 m
B: 60 mm mini - 600 mm maxi
C: 3 to 6 mm
Round conical, polygonal
(32, 16 and 8 sides)
Conicity maxi: 50%

WELDING PROCESSES

- SAW single wire diameter from 1.6 to 5.0 mm
- Plasma welding 3 or 4 heads

MACHINE CYCLE

- SIEMENS controller
- Overview and control in real time of the machine, parameters recording, remote connection

PERFORMANCES / OUTSTANDING POINTS

- Joint tracking with camera and operator joystick
- Only 1 operator
- Machine availability: 95%
- Fix machine / Movable piece
- Speed range: 1 m/min to 3 m/min according to process and thickness

MIG/MAG MACHINE RANGE

The **MIG/MAG** applications are used in various domains from the simple carriage for shipyard industry to large gantry for train manufacturing.

The choice of the machine depends mainly on the size of the piece to weld.

Lincoln Electric propose solutions according your need.

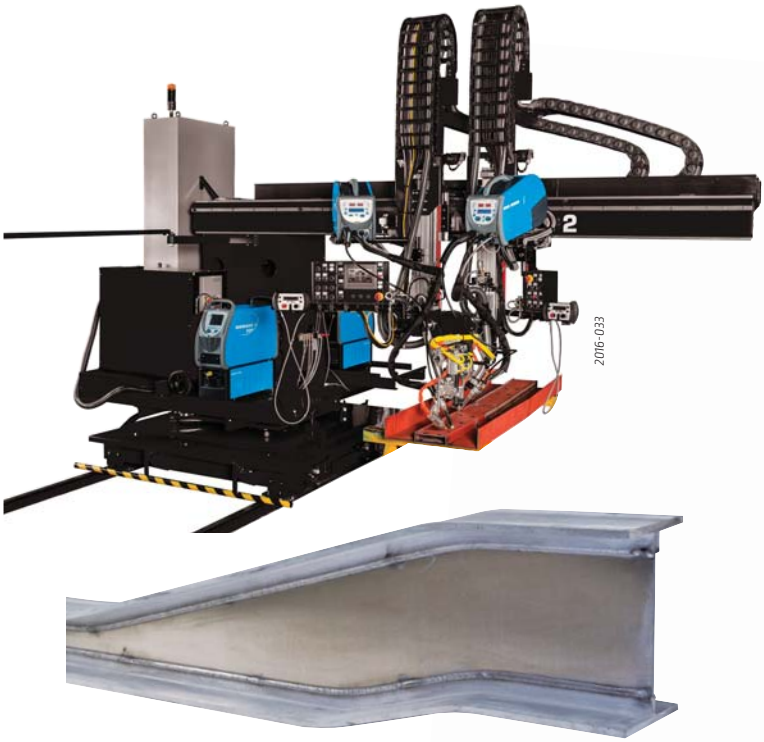

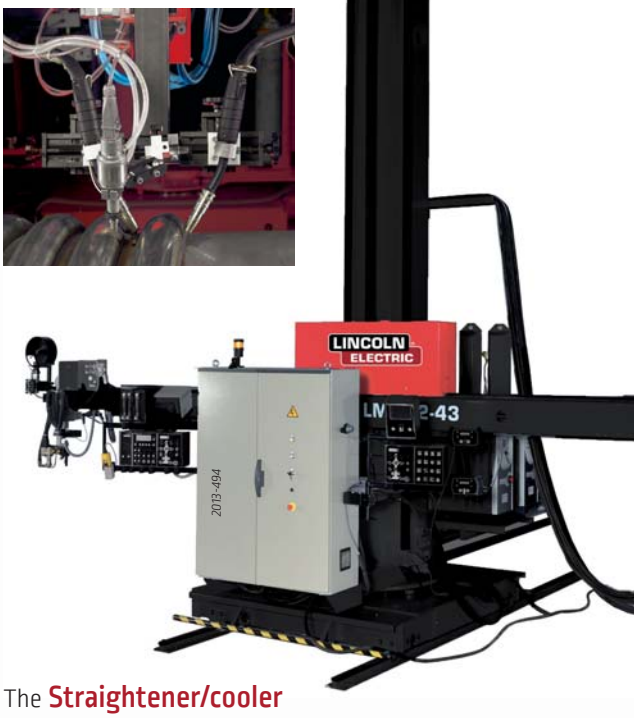

The **Straightener/cooler MIG/MAG application** is often combined to the food tanks manufacturing with plasma process.

The MIG/MAG **Autonomous welding head installation**

The **Autonomous carriages** allow the longitudinal and circular welding of large vessels. They are also often used in the shipyard industry.

2011-317LE

MIG MAG welding aluminium Gantry with two torches to answer applications requiring a high level of productivity with large pieces such as the manufacture of railway wagons.

2231-52

2010-782LE

The **MIG/MAG welding seamer bench** allows the longitudinal weld of sheet metal or tanks.

2006-248LE

The **Turning electrode** is a simple solution for small circular welds with MIG/MAG torches.

2231-40

MIG/MAG EQUIPMENT

DIGIWAVE III 520-R

DIGIWAVE III 520 A or R versions and wire feed unit DVU-R500
A for automation: level 1 (start/stop cycle ; analogic settings for U and I)
R for robotic: fieldbus communication

With its smart design, its color screen and its innovative communication interfaces, the **DIGIWAVE III** concretizes the most recent technologic breakthroughs and positions itself at the cutting edge of the welding techniques.

Main characteristics and advantages:

- Digital precision and outstanding welding performances,
- Full range of processes for all applications: Speed Short Arc, Pure Controlled Metal, Pulse, Soft Silence Pulse, Spray Modal, High Penetration Speed, Advanced Sequencer, MMA coated electrodes, Gouging up to 8 mm,
- More than 200 synergic curves with possibility to realize yourselves up to 50 customizable curves,
- Storage up to 100 welding programs,
- Traceability of the welding parameters,
- Control process: you set yourselves the control thresholds of the welding parameters not to go above, and you are warned in real time as soon as a fault is detected,
- User management and locking mode,
- Monitoring with USB, Ethernet,
- RC JOB II for remote control,
- DVU-R500 is only 6,1 kg and 4 rollers drive.

	DIGIWAVE III 520-R
Duty cycle at 100%	450 A (at 40°c)
Primary power supply	3 x 320 - 480 V / 50-60 Hz
Max primary consumption	28.5 A
Current range	15 to 500 A
Weight	40 kg
Dimensions (W x L x H)	273 x 736 x 1 521 mm

DIGIWAVE III Software solutions

SWAN

Supervising Welding Administrating Network

A software solution to allow better traceability to ensure quality level:

- Follow the production,
- Compare weld beads,
- Get curves and statistic on welding parameters,
- Heat input,
- Identification of the bead by unit number.

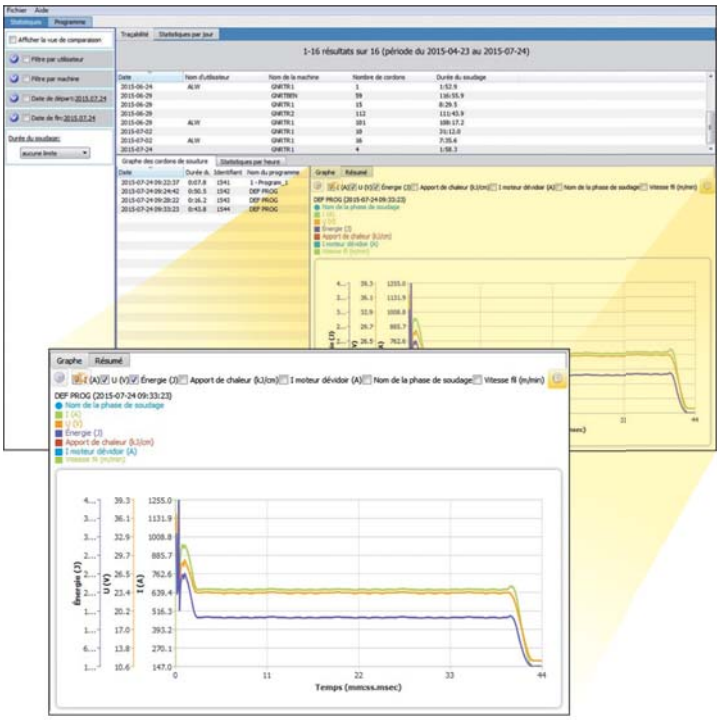

POWER WAVE® S500 CE

Powerful Multi-Process Capability.

The multi-process **Power Wave® S500 CE** is packed with **Lincoln Electric** performance technology for welding on thicker materials. It provides an extremely fast arc response, includes over 65 standard welding waveforms for optimized performance on almost any application and efficiently converts input power to reduce operational costs.

Power Wave® S500 CE proposes advances MIG-MAG welding process as:

- Pulse,
- Pulse-on-Pulse®,
- Power Mode®,
- RapidArc®,
- Rapid X™ (With STT® Module),
- Rapid Z™,
- Upgradable for additional processes to be developed in the future.

THE LINCOLN ELECTRIC GREEN INITIATIVE
Inverter Technology reduces energy demand
www.lincolnelectric.com/green

AUTODRIVE®
4R100 wire drive

User interface

	POWER WAVE® S500 CE
Duty cycle at 100%	450A / 36,5V
Primary power supply	200/208/220/230/380/400/415/460/575V 3/50/60Hz
Max primary consumption	60/54/30/27/21 A
Current range	5 to 550 A
Weight	68 kg
Dimensions (W x L x H)	355 x 630 x 571 mm

Power Wave® Software Solutions

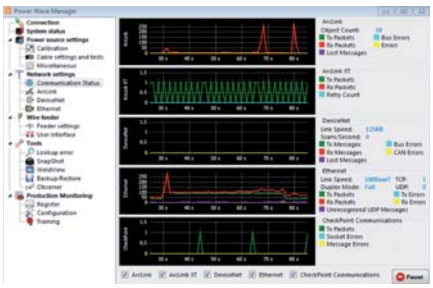

Power Wave Manager

- Check the status of every component in your welding system.
- View and easily adjust the information associated with your welding operation.
- Setup the configuration of the differents components of the welding installation.
- Display of all real-time measurement values like voltage, ampere, wire feed speed, torque.

CheckPoint™: Welding Production Monitoring

CheckPoint's secure, cloud-based access allows key stakeholders to view and track welding operations anywhere in the world, on any device:

- Track real-time weld production data 24/7.
- Create custom custom alerts and notifications.
- Operator Arc on Time.
- Material Consumption.
- Weld and Assembly Information.

Production monitoring™

Production monitoring monitors a lot of information for the management of the customer production.

- Current status and shift analysis.
- Weld listing and downtime analysis.
- Monitoring by Weld ID, Employee ID or Consumable Lot ID.

Weldscore™

Allows you to score each weld based on a trained sample of acceptable welds.

Great for:

- Expanding quality control capabilities,
- Trade school monitoring, grading and final examinations,
- Critical welds with specific quality control requirements,
- Operator testing and certification programs or Consumable Lot ID.

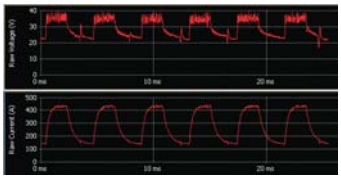

MIG/MAG EQUIPMENT

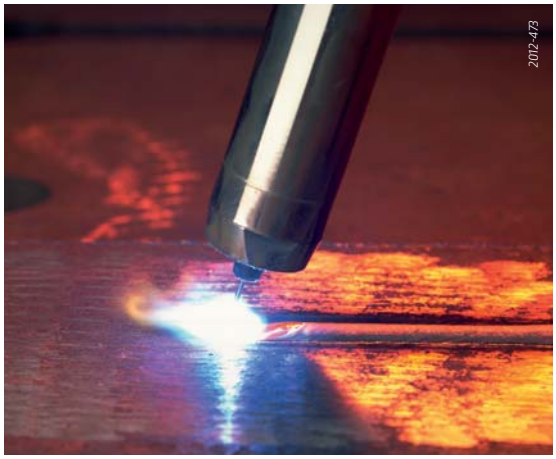

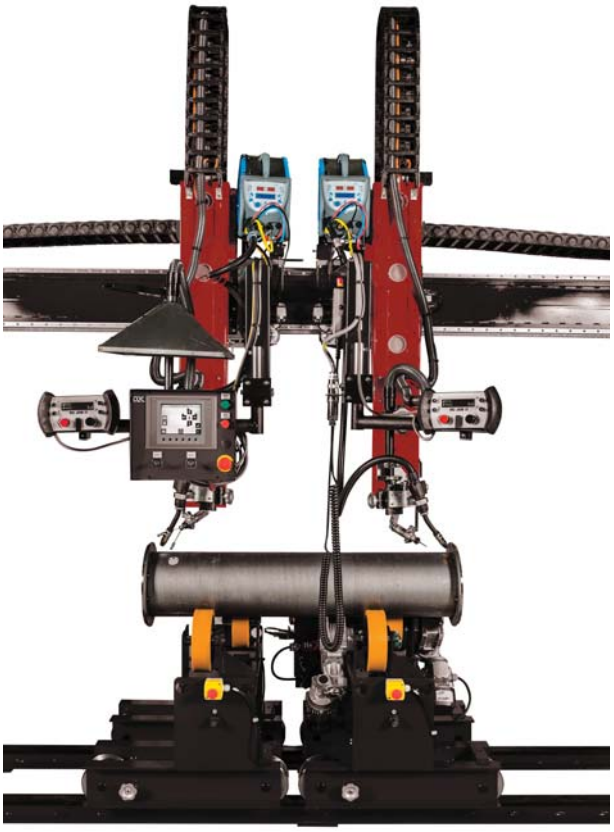

Options for all types of installation

Torches

Water cooled torches dedicated for automatic welding MIG/MAG installations.

- Excellent cooling up to the nozzle holder,
- Good gas protection with the long shape of the nozzle.

Characteristics	TM 501W	TR 600	TM 700
Duty cycle	500 A at 100%	400 A at 100%	700 A at 100%
Wire diameter (mm)	1 to 2.4	0.8 to 1.6	1.2 to 3.2
Harness length (m)	1 to 2.5	1 to 4	Without - direct connection
Version	Straight or curved 22 or 45°	Straight or curved 22 or 45°	Straight
Option	-	-	Additional gas protection for light metal alloy

Seam tracking

TRACKMATIC device guarantees the good positioning of the torch in the joint to be welded without operator intervention. A sensing probe finger or an inductive sensor allows joint tracking (height or alignement) and commands the necessary corrections required to the torch trajectory. It ensures a constant weld quality, an increase of productivity, a reduction in repair operation and easier use for the operator.

Video camera

The video system **VISIOARC VA2** including protection against spatters and fumes, can be easily integrated. It uses a greatly enlarged image which enables the precise position of the welding torch to be viewed thus making the operator's work easier and improving the quality of the welding operation.

System with large color screen 15'',
miniaturised camera and additional lighting.

MIG/MAG CARRIAGES

Carriages for MIG/MAG welding

2012-196

2008-509

2012-195

2012-199

	WELDYPOCKET	WELDYCAR	WELDYSTIFFENER	WELDY-RAIL
	Autonomous carriage with rechargeable battery. MIG/MAG welding with manual equipment.			
	Flat position welding, small footprint. Basic application, easy implementation.	All positions welding (permanent magnet). **Exists in 2 models:** · WELDYCAR - speed 5 - 140 cm/min, · WELDYCAR PRO - speed 5 - 140 cm/min, with programmation (continuous welding or not).	Welding with 2 manual welding torches. Programmable carriage. **Exists in 2 models:** • for height: 60-160 mm, • for height: 120-320 mm.	All positions welding of carbon steels, stainless steels and aluminium. **Exists in 2 models:** • WELDY-RAIL manual, • WELDY-RAIL with linear oscillating. **2 rail models:** • Magnetic rail, • Pneumatic rail.
Applications	This carriage is used to facilitate the implementation of a regular welding. Boiler making in carbon steel.	Angle, butt, overhead and vertical welding with guidance by crabbing arm.	Welding of stiffeners in ship yards.	Angle, butt, overhead and vertical welding. The carriage is travelling on a magnetic or pneumatic rail according the piece to be welded.
Main features				
Carriage speed	15 - 120 cm/min	5 - 140 cm/min	15 - 180 cm/min	5 - 80 cm/min
Di mensions (L x l x h)	140 x 240 x 220 mm	250 x 300 x 260 mm	500 x 500 x 600 mm	220 x 270 x 230 mm
Weight (netto)	5 kg	11 kg	16 kg	7 kg
Options	Arc protection	Pendular oscillating unit. Linear oscillating unit. Magnetic crabbing rails, aluminium wheels... many other options on request.	-	Linear oscillating unit for WELDY-RAIL manual.

Thanks to a modular design, the carriages can be used in different configurations.

2013-225

2000-438

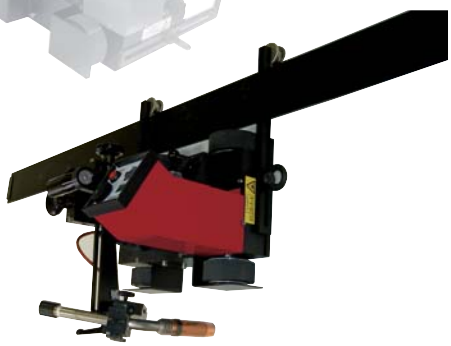

POSITIONING RANGE

Since control over the welding process is the key to any system's performance, Lincoln Electric offers a full range of positioning equipment.

This high quality and robust equipment can be combined with any processes.

The good choice in this complete positioning range, depends on the characteristics of the piece to manipulate.

The **Mechanization** to customize the machine around the piece to weld.

The **Headstocks** 2 or 3 axis to manipulate medium piece in all positions.

The **Positioners** to allow the positioning of the piece in 2 or 3 axis.

The **Rotators** to position large vessels for welding.

2011-401

The **Seamer benches** for longitudinal weld of plates or vessels.

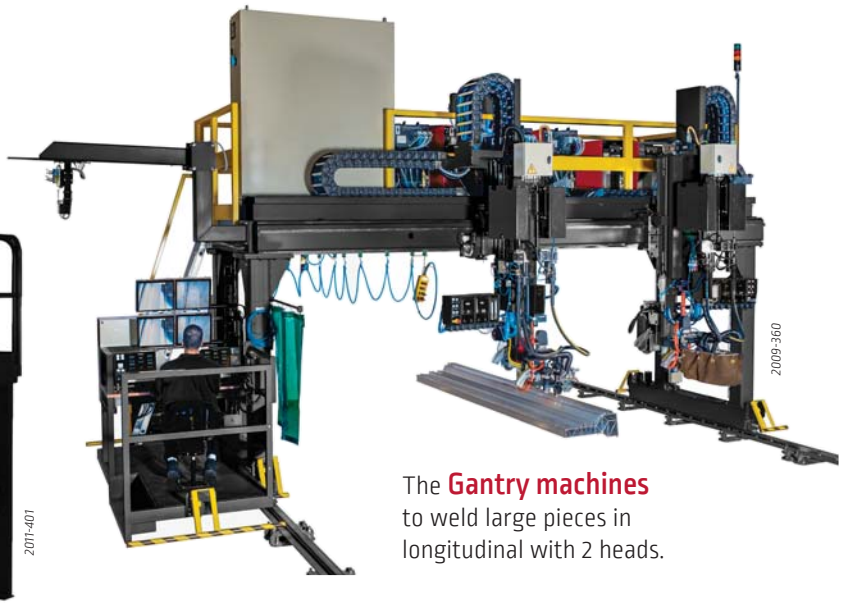

2009-360

The **Gantry machines** to weld large pieces in longitudinal with 2 heads.

2013-148

The **Turntables** to turn the piece for positioning or for welding.

2016-475_ret

The **Column & Booms** to weld large tanks with any processes.

CB-MATIC: column and booms

Lincoln Electric column and booms are the professional answer to your needs.

Ideal for pressure vessels manufacturer of stainless steel, mild steel and light alloy, they maximise your benefit from automatic MIG/MAG, submerged arc, TIG, plasma and plasma + TIG welding processes.

Column and boom choice

According the welding /cutting process and the size of the vessels to work on, it is possible to choose for XS, S, L or XL column and boom. This C&B can be fixed on the ground (F) or mobile on rails (M). For the heavy and intensive work, we preconize to use the L column and boom and for large tank the XL type when the vessel size required it.

			15 x 10	25 x 23	32 x 33	42 x 43	52 x 43	62 x 43	52 x 53	62 x 63	72 x 73	Speed		
Vertical stroke (mm)			1 500	2 500	3 200	4 200	5 200	6 200	5 200	6 200	7 200	Arm speed	Carriage speed	Lifting speed
Horizontal stroke (mm)			1 000	2 300	3 300	4 300	4 300	4 300	5 300	6 300	7 300	cm/min	cm/min	cm/min
A Maxi load at the end of the arms (kg) + B Height (mm) without rail	1	XSF	A	200	80								Manual or 12 to 300	-	Manual or 120
			B	2 625	3 625										
		XSM	A	200	80								Manual or 12 to 300	Manual or 57 to 570	Manual or 120
			B	2 630	3 630										
	2	SF	A		200	175	150						20 to 300 or 5 to 300	-	110 or 5 to 110
			B		4 580	5 280	6 280								
		SM	A		200	175	150						20 to 300 or 5 to 300	20 to 500 or 5 to 500	110 or 5 to 110
			B		4 635	5 335	6 335								
	3	LF	A		400	400	300	300	300	150			20 to 500 or 5 to 500	-	110 or 5 to 160
			B		4 850	5 550	6 550	7 550	8 550	7 550					
		LM	A		400	400	300	300	300	150			20 to 500 or 5 to 500	20 to 500 or 5 to 500	110 or 5 to 160
			B		4 850	5 550	6 550	7 550	8 550	7 550					
		XLF	A				400	400	400	400	400	300	5 to 500	-	160 or 5 to 160
			B				7 075	8 075	9 075	8 075	9 075	10 075			
	4	XLM	A				400	400	400	400	400	300	5 to 500	20 to 500	160 or 5 to 160
			B				7 125	8 125	9 125	8 125	9 125	10 125			

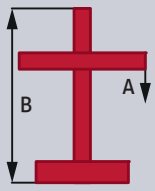

Standard equipment

Different platforms for power sources.

Cable chain on arm and shaft.

Possibility of double headed equipment for L or XL column and booms.

Different possibilities of control panel position (on column and boom or on movable foot).

Railway per multiple of 3 m or 6 m with cable chain.

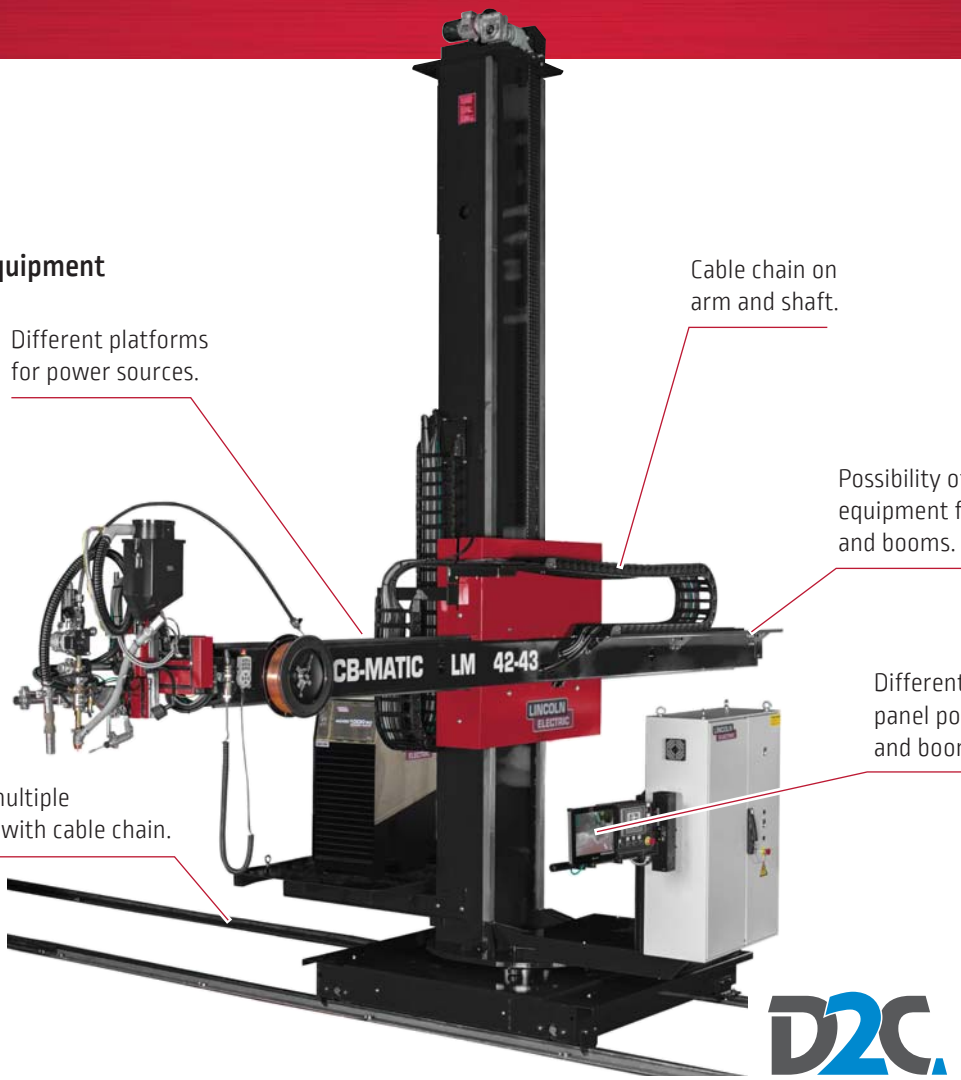

D2C Digital Cycle Control

Control command

Column and boom specific size.

According to the process, the column and boom can be equipped with D2C or HPW control.

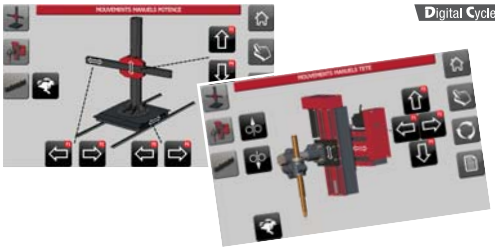

D2C control panel

HPW Advanced control panel

Customized solutions

Column and boom big size and specific size.

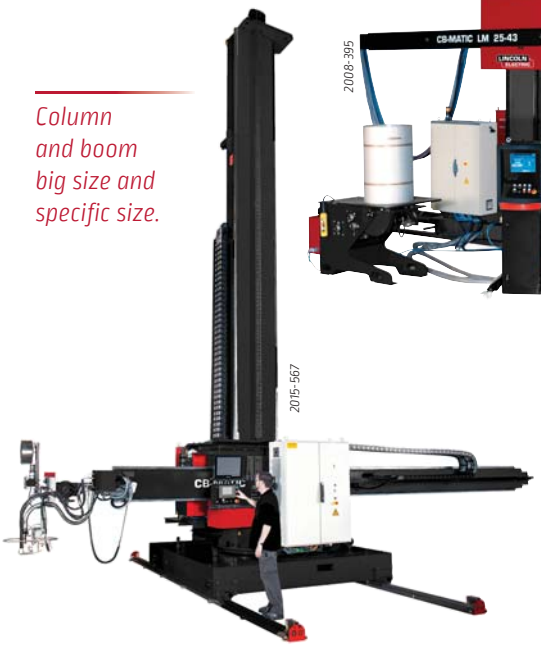

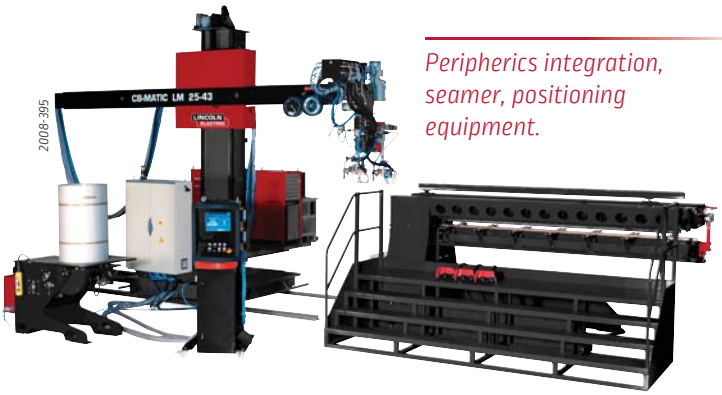

Peripherics integration, seamer, positioning equipment.

Special configuration to adapt to customer environment.

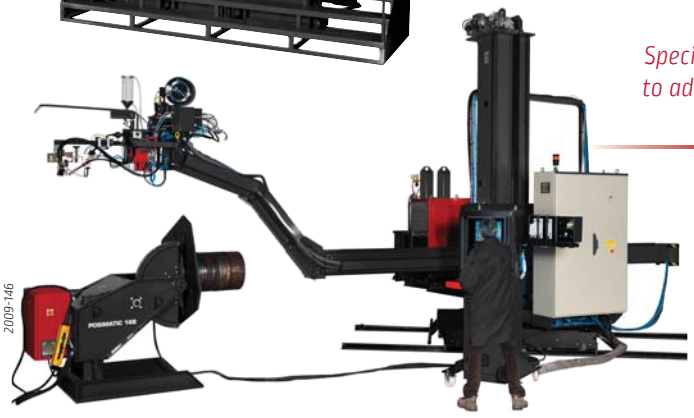

SEAM-MATIC: welding seamer benches

Lincoln Electric offers a range of seamers specifically designed for horizontal welding, supporting flat or cylindrical (round or square section) workpieces with a wide range of dimensions.

4 types of seamers: FIN: small thickness, EX: external welding, IT: internal welding and EXIT: external/internal welding.

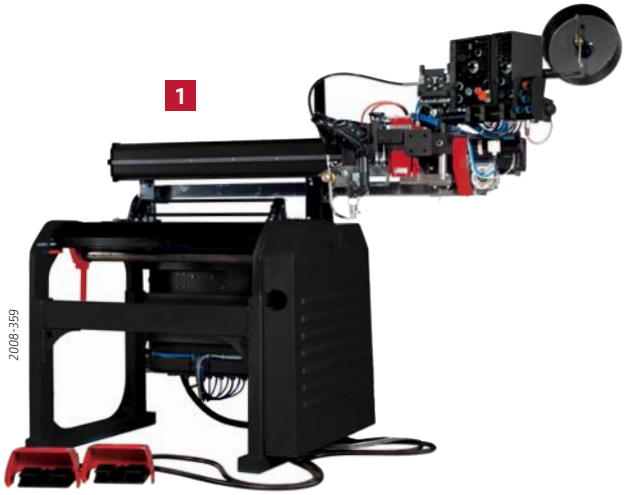

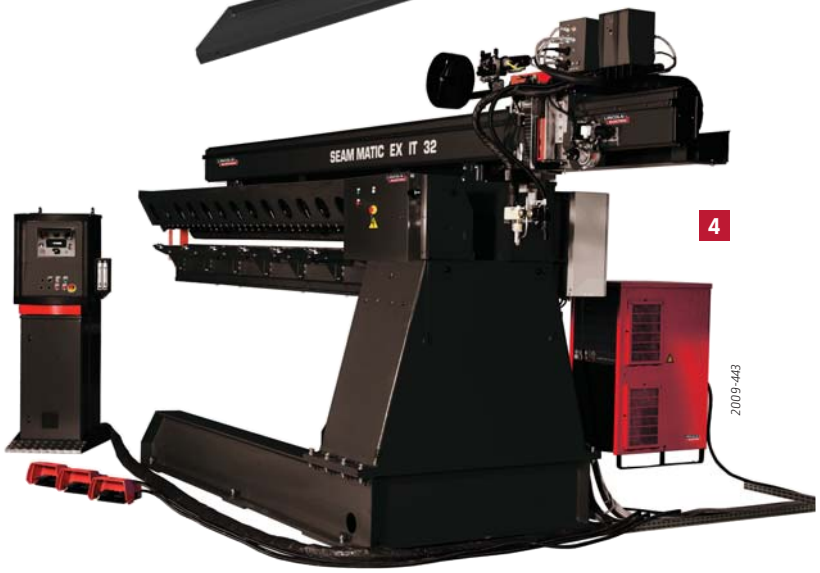

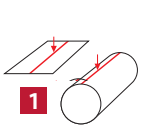

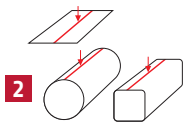

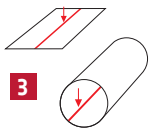

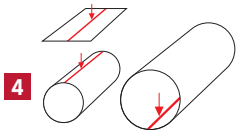

		FIN	EX (xx from 10 to 20)					IT						EXIT			
		10V07	12Vxx	17Vxx	22Vxx	32Vxx	42Vxx	22	32	42	52	62	72	32	42	52	62
Clamping Length *		1 050	1 250	1 750	2 250	3 250	4 250	2 250	3 250	4 250	5 250	6 250	7 250	3 250	4 250	5 250	6 250
External welding (mm)	Ø mini	80	210	220	270	320	460	-	-	-	-	-	-	380	480	580	600
	Ø maxi	700	xx00	xx00	xx00	xx00	xx00	-	-	-	-	-	-	1 500	1 500	1 550	1 600
Internal welding	Ø mini	-	-	-	-	-	-	1 450	1 500	1 500	1 550	1 600	1 650	1 500	1 500	1 550	1 600
Thickness (mm)	without tacking	0.6 to 3	0.8 to 5	0.8 to 5	1 to 5	1 to 5	1 to 5	1 to 5	1 to 5	1 to 5	1 to 5	1 to 5	1 to 5	1 to 5	1 to 5	1 to 5	1 to 5
	with tacking	0.6 to 3	0.8 to 8	0.8 to 8	1 to 8	1 to 8	1 to 8	1 to 10	1 to 10	1 to 10	1 to 10	1 to 10	1 to 10	1 to 10	1 to 10	1 to 10	1 to 10

** Maxi weldable length depends of head's configuration (number of torches and their options). To be confirmed on request.*

Other dimensions or types on request.

Standard equipment

Cable chain
In standard configuration on all models

Control panel
For all seamers, possibility to have control panel on the welding head or on movable foot.

Digital controller D2C

Open device
In standard, the open device is manual.
For the EX seamer, there is the possibility to have a pneumatic or eletric open device.

Control pedal
Operating pedals used to open or close the clamps.

Control command
Simple analogical command through the process command panel or numerical command through the PLC command with HMI - D2C.

Customised solutions

According the customer's needs, we could adapt the sizes and the process to reach the best productivity and quality.

Operator platform.

Large seamer with infeed and outfeed table.

Seamer with lifting for variable diameter vessels.

Mechanisation

Lincoln Electric proposes to design machines with modular elements in order to build the machine around the piece to be welded.

The mechanisation allows to save time for your project of machine.

Machine design

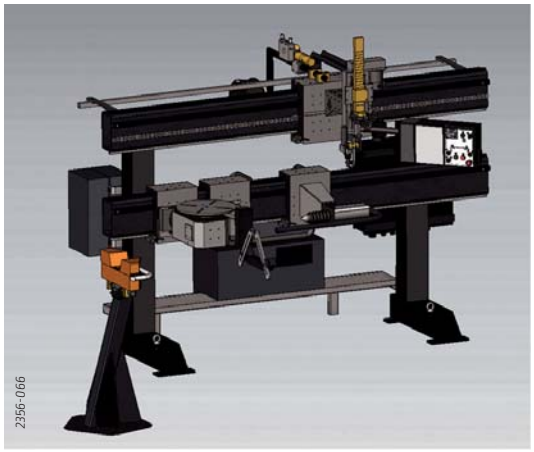

Machine realisation

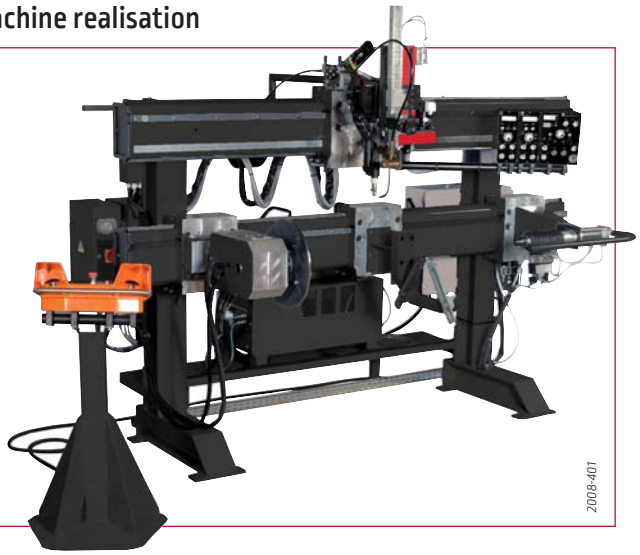

A large choice of mechanisation parts

Beam, carriage, manual or motorised slides...

Oscillation mechanism...

Headstock, tailstock, rotation block, mandrel...

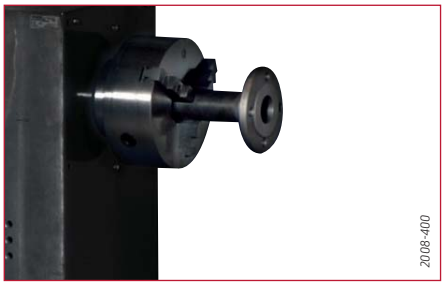

X rotators, support blocks, command box supports...

Trackmatic probes, mechanical tracking...

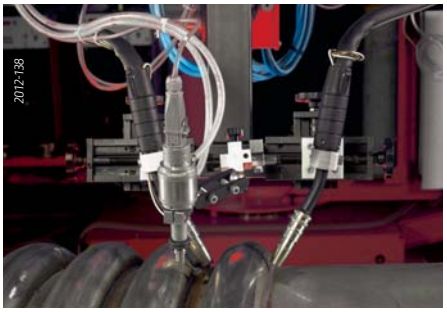

Cycle control boxes, electrical cabinet...

Examples of mechanisation machines

Double MIG/MAG mechanisation
for endless screw welding

MIG/MAG gantry for aluminium train welding

SAW platform
for school training

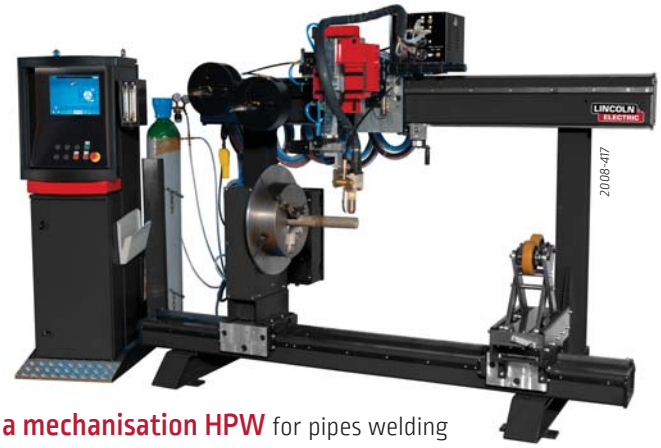

Plasma mechanisation HPW for pipes welding

Headstock mechanisation
for process piping

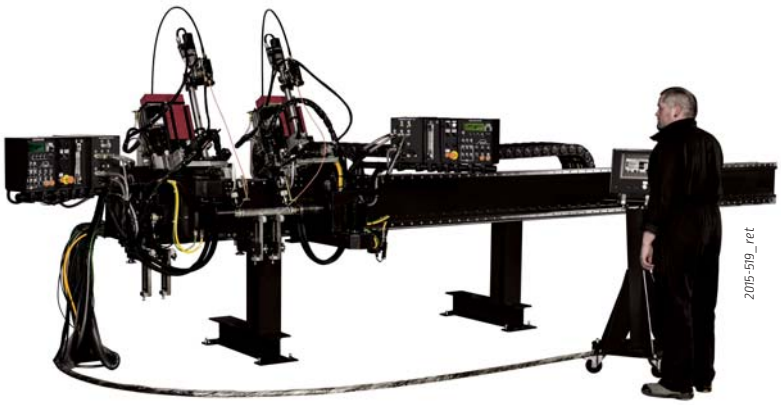

Lathe 2 torches for TIG welding
of aluminium tubes

ROTAMATIC: single roller beds

Medium-duty rotator: 2 to 30 tons

- Single powered (one drive roller) for small unbalance work piece.
- Double powered (two drive rollers) for work pieces having significant unbalance.
- Roller-to-roller center distance adjusting by screw (except for ST 2: by step).
- Remote pendant, kit auto and digital display on all versions.

Possible options:

- Kit ± 1% speed regulation,
- Kit encoder 5 000 pts,
- Lorry and railway.

Technical specifications:

Designation		Load capacity (1 drive + 1 idler) kg	Load capacity per section kg	Shell diameter mm	Peripherical speed cm/min	Wheel dimension OD x width mm	Wheel material
ST 2	MT	2 000	1 000	30 to 2 500	12 to 120	Ø 150 x 50	Polyurethane
	M						
	W						
	F						Polyamide
ST 6	M	6 000	3 000	300 to 3 500	12 to 120	Ø 250 x 75	Polyurethane
	W						
	F						
ST 15	M	15 000	7 500	300 to 4 000	12 to 120	Ø 250 x 110	Polyurethane
	W						
	F						
ST 30	W	30 000	15 000	350 to 4 500	12 to 120	Ø 350 x 150	Polyurethane
	F						

Keys: M = Single motorisation / W = Double motorisation / F = Idler roller / MT = Single motorisation with tube system

Special roller beds

Small 6 tons roller beds Ø 100 to 600 mm

Special roller beds with large diameter rollers.

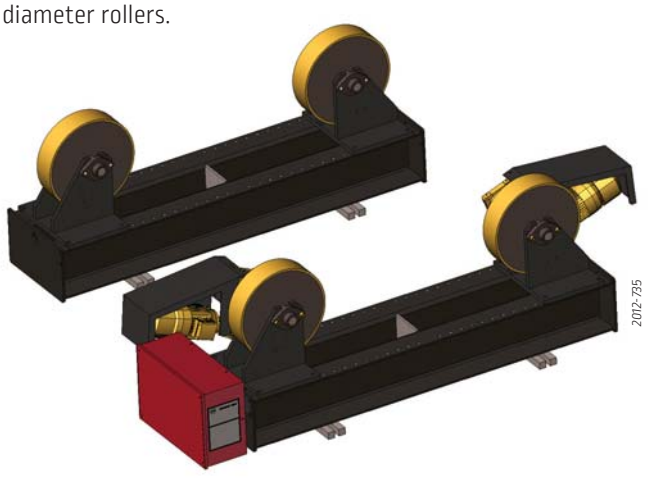

Heavy-duty roller beds: 30 to 500 tons

- Each rotator is composed of a mechanical structure and rotation roller motorized with roller adjustment by step or screw. In the motorized version, the rotator is equipped with an electrical cabinet.
- Remote pendant, with 30 m cable and kit auto in standard on all versions.

Possible options:

- Lorry and railway,
- End stop, encoder,
- Digital display.

Technical specifications:

Designation	Load capacity (1 drive + 1 idler) kg	Load capacity per section kg	Shell diameter mm	Peripherical speed cm/min	Wheel dimension OD x width mm	Wheel material
CR 30*	30 000	15 000	570 to 6 800	14 to 140 or 10 to 185	Ø 520 x 150	Steel
					Ø 520 x 178	Polyurethane
CR 60*	60 000	30 000	570 to 6 800	14 to 140 or 10 to 185	Ø 520 x 150	Steel
					Ø 520 x 355	Polyurethane
CR 100*	100 000	50 000	570 to 6 800	14 to 140 or 10 to 185	Ø 520 x 150	Steel
					Ø 520 x 533	Polyurethane
CR 125*	125 000	62 500	570 to 6 800	14 to 140 or 10 to 185	Ø 520 x 150	Steel
					Ø 520 x 710	Polyurethane
CR 200*	200 000	100 000	570 to 6 800	10 to 100 or 9 to 160	Ø 600 x 175	Steel
					Ø 558 x 685	Polyurethane
CR 300*	300 000	150 000	800 to 7 500	10 to 100 or 9 to 160	Ø 700 x 230	Steel
					Ø 860 x 406	Polyurethane
CR 500*	500 000	250 000	1250 to 7 500	10 to 100 or 9 to 160	Ø 700 x 230	Steel
					Ø 860 x 686	Polyurethane

** Available in version D (Drive double motorisation) or I (Idler roller)*

Highter capacity roller beds on request.

ROTAMATIC: fit-up roller beds

Fit-up roller beds: 30 to 500 tons

- In standard, the up and down movement is made by a manual hydraulic pump.
- Spacing rotation roller with adjustment by step.

Possible options:

- Automatic hydraulic pump (hydraulic central),
- Lorry and railway.

Technical specifications:

Designation	Load capacity (2 fit-up) kg	Lifting capacity per section kg	Shell diameter mm	Wheel dimension OD x width mm	Wheel material	Wheels adjustment
FR 30	30 000	15 000	570 to 6 800	Ø 520 x 178	Polyurethane	Step
FR 60	60 000	30 000	570 to 6 800	Ø 520 x 355	Polyurethane	Step
FR 100	100 000	50 000	570 to 6 800	Ø 520 x 533	Polyurethane	Step
FR 200	200 000	100 000	570 to 6 800	Ø 558 x 685	Polyurethane	Step
				Ø 600 x 175	Steel	Step
FR 300	300 000	150 000	800 to 7 500	Ø 860 x 406	Polyurethane	Step
				Ø 700 x 230	Steel	Step
FR 500	500 000	250 000	1 250 to 7 500	Ø 700 x 230	Steel	Step

Highter capacity roller beds on request.

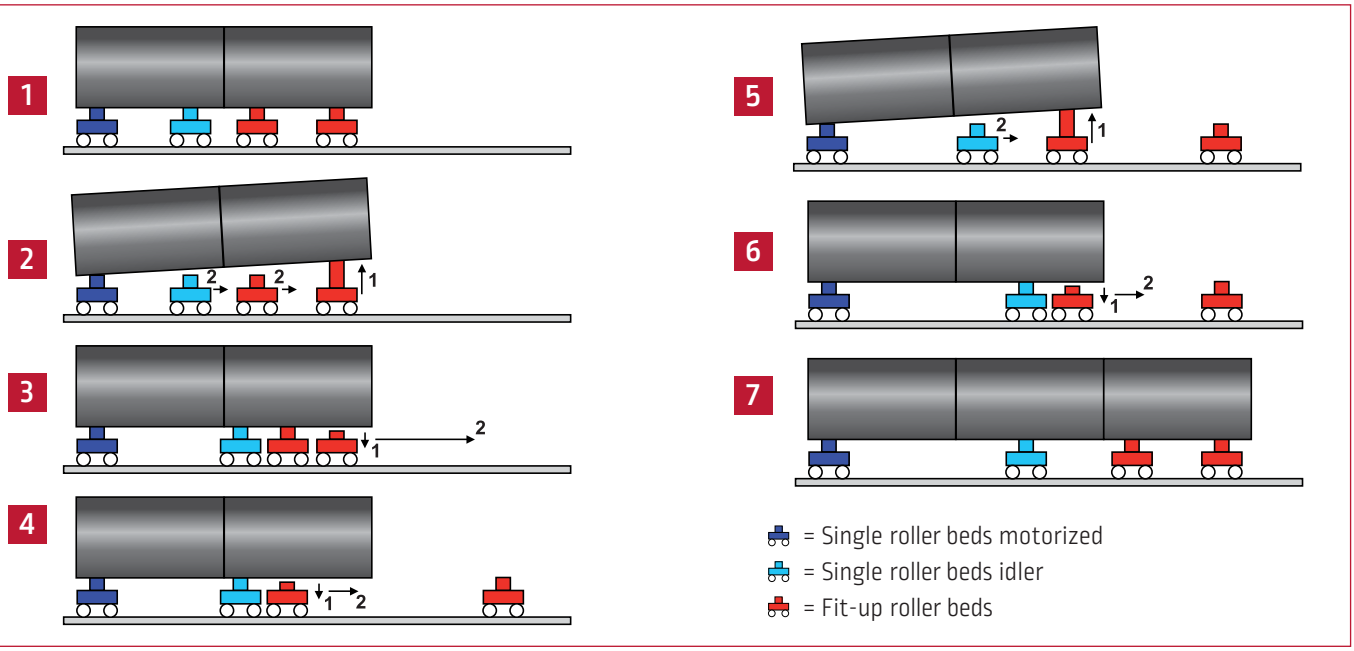

Version with automatic hydraulic central:

ROTAMATIC: self aligning roller beds

5 to 500 tons

- Each roller bed is composed of a mechanical structure and rotation roller motorized or not.
- In the motorized version, the rotator is equipped with an electrical cabinet.
- In standard: remote pendant with 30m cable, and kit auto on all versions.

Possible options:

- Lorry and railway,
- End stop, encoder,
- Digital display.

Technical specifications:

Designation	Load capacity (1 drive + 1 idler) kg	Load capacity per section kg	Shell diameter mm	Peripherical speed cm/min	Wheel dimension OD x width mm	Wheel material
ACR 5*	5 000	2 500	380 to 3 000	14 to 140 or 10 to 200	Ø 254 x 102	Rubber
ACR 10*	10 000	5 000	450 to 4 600	14 to 140 or 10 to 200	Ø 381 x 127	Rubber
ACR 20*	20 000	10 000	450 to 4 600	14 to 140 or 10 to 200	Ø 381 x 127	Polyurethane
ACR 30*	30 000	15 000	450 to 5 200	14 to 140 or 10 to 200	Ø 457 x 127	Polyurethane
ACR 60*	60 000	30 000	450 to 5 200	14 to 140 or 10 to 200	Ø 457 x 152	Polyurethane
ACR 100*	100 000	50 000	500 to 6 000	14 to 140 or 10 to 200	Ø 559 x 178	Polyurethane
ACR 200*	200 000	100 000	600 to 6 500	10 to 100 or 8 to 185	Ø 559 x 180	Steel
					Ø 559 x 356	Polyurethane
ACR 300*	300 000	150 000	1 000 to 7 500	10 to 100 or 8 to 185	Ø 559 x 203	Steel
ACR 500*	500 000	250 000	1 000 to 7 500	10 to 100 or 8 to 185	Ø 559 x 300	Steel

** Available in version D (Drive double motorisation) or I (Idler roller)*

Highter capacity roller beds on request.

ROTAMATIC options

Lorry

The lorry allows to move the roller beds with or without the piece.

The idler lorry and the motorised lorry can be mounted on the same line.

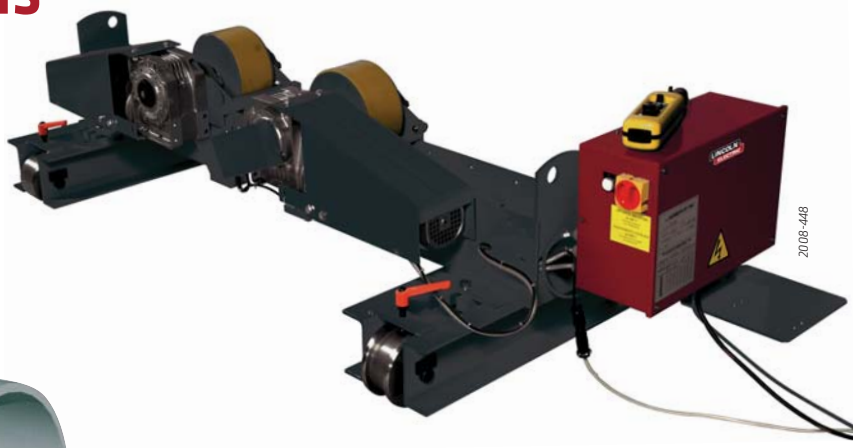

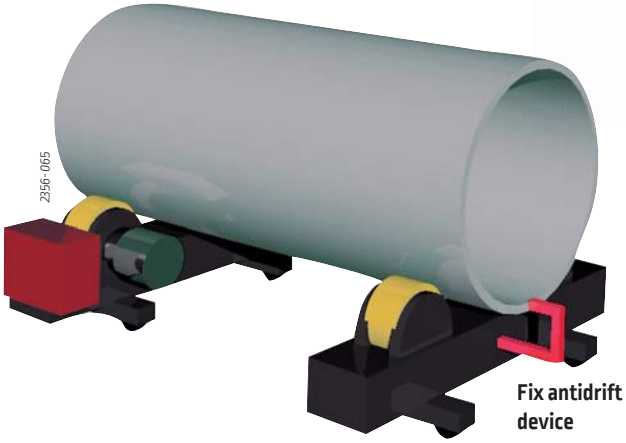

Fix antidrift device

Anti-drift device

The end stop device allows the piece to turn without drifting.

An automatic solution can be proposed with a PLC which controls the idler roller positions.

POSIMATIC: positioners

2 types of positioners are available:

- Conventional: from 100 kg to 30 tons.
- With lifting table: from 1 500 kg to 10 tons.

	Load all positions kg	Tilt torque m.kg	Rotation torque m.kg	Rotation speed tr/min	Turntable height mm	Remote control or pedal	Pictures
Conventional range							
P1E 1	50	4.5	2	0.2 to 5	385	Pedal	
P2E	200	40	4	0.25 to 5	500	Pedal	
PS03	300	100	35	0.2 to 3	660	RC + Pedal	
PS08 2	800	280	120	0.16 to 2.4	848	RC + Pedal	
PS15	1 500	550	225	0.14 to 1.8	1 051	RC + Pedal	
PS30 3	3 000	1 300	450	0.1 to 1.5	1 222	RC + Pedal	
TP4	4 000	1 100	500	0.045 to 0.45	1 110	RC	
TP6	6 000	2 500	720	0.03 to 0.3	1 150	RC	
TP8	8 000	3 600	850	0.025 to 0.25	1 000	RC	
TP10	10 000	6 750	1 450	0.022 to 0.22	1 190	RC	
TP15 4	15 000	10 300	2 100	0.02 to 0.2	1 275	RC	
TP20	20 000	14 200	2 900	0.018 to 0.18	1 340	RC	
TP30	30 000	22 500	4 400	0.015 to 0.15	1 450	RC	
With lifting table range							
TPE 1.5	1 500	375	160	0.06 to 0.6	970 to 1 700	RC	
TPE 2.5 5	2 500	600	200	0.06 to 0.6	1 030 to 1 850	RC	
TPE 4	4 000	1 100	500	0.045 to 0.45	1 060 to 2 010	RC	
TPE 6	4 000	2 500	720	0.035 to 0.35	1 125 to 2 125	RC	
TPE 8	4 000	3 600	850	0.025 to 0.25	1 125 to 2 125	RC	
TPE 10	10 000	6 750	1 450	0.022 to 0.22	1 150 to 2 350	RC	

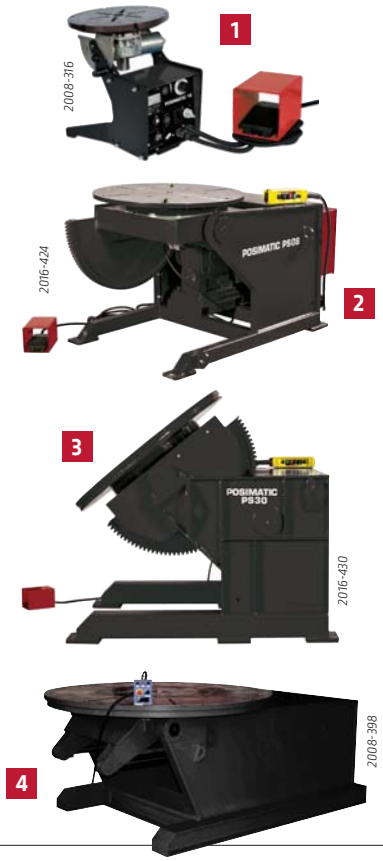

Higher capacity or different rotation speed range on request.

HEADMATIC: headstock

3 types of headstock are available:

- Conventional 1 axis up to 1 ton,
- With lifting 2 axis up to 32 tons,
- With 3 axis up to 20 tons.

2012-734_ret

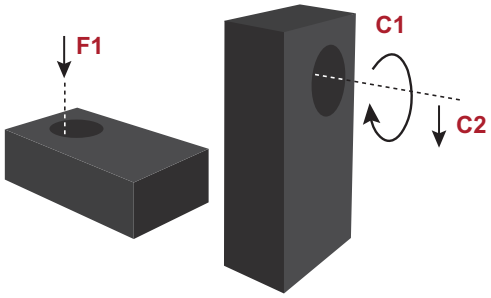

HEADMATIC conventional 1 axis

MINITOP, TOP and SUPERTOP II can be integrated on mechanisation with or without tailstock.

Designation	Flat Load capacity (F1) kg	Rotation torque (C1) m.kg	Tilting torque (C2) m.kg	Rotation speed tr/min
MINITOP 26.8 tr	50	3.6	14	2.7 to 26.8
MINITOP 8.25 tr	50	9.4	14	0.82 to 8.25
MINITOP 3.75 tr	50	16	14	0.37 to 3.75
TOP	300	15	90	0.05 to 4.5
SUPERTOP II	1 000	60	300	0.05 to 5

HEADMATIC 2 axis HL range

HL range with synchronized lifting movement for manual manipulation or integrated on machine.
The HL machine is composed of:

- HLM: headstock,
- HLF: tailstock.

We can propose the HLM without the idler headstock and the load capacity is half of the HLM+F load capacity.
Possible options: lorry and railway.

Designation	Load capacity kg	Rotation torque (C1) m.kg	Rotation speed tr/min
HLM+F 2x1.5	3 000	250	0.1 to 1
HLM+F 2x4	8 000	500	0.1 to 1
HLM+F 2x6	12 000	720	0.1 to 1
HLM+F 2x8	16 000	960	0.1 to 1
HLM+F 2x10	20 000	1200	0.1 to 1
HLM+F 2x16	32 000	1900	0.1 to 1

2012-733

HEADMATIC 3 axis HL3A

Possibility to propose HEADMATIC 3 axis up to 20 tons.

2012-736

TURNMATIC: turntable

Turntable 5 to 30 tons

Circular welding can be done by the movement of the turntable without moving the torch.

In the standard range, a turntable can make the rotation of shells up to 30 tons and up to 4 500 mm diameter.

Designation	Load capacity kg	Mini shell diameter mm	Maxi shell diameter mm	Rotation speed tr /min
TURNMATIC 5 T	5 000	1 200	4 500	0.004 to 0.204
TURNMATIC 10 T	10 000	1 000	4 500	0.004 to 0.204
TURNMATIC 20 T	20 000	1 000	4 500	0.004 to 0.204
TURNMATIC 30 T	30 000	1 000	4 500	0.004 to 0.204

Other sizes, capacities or rotation speed range on request.

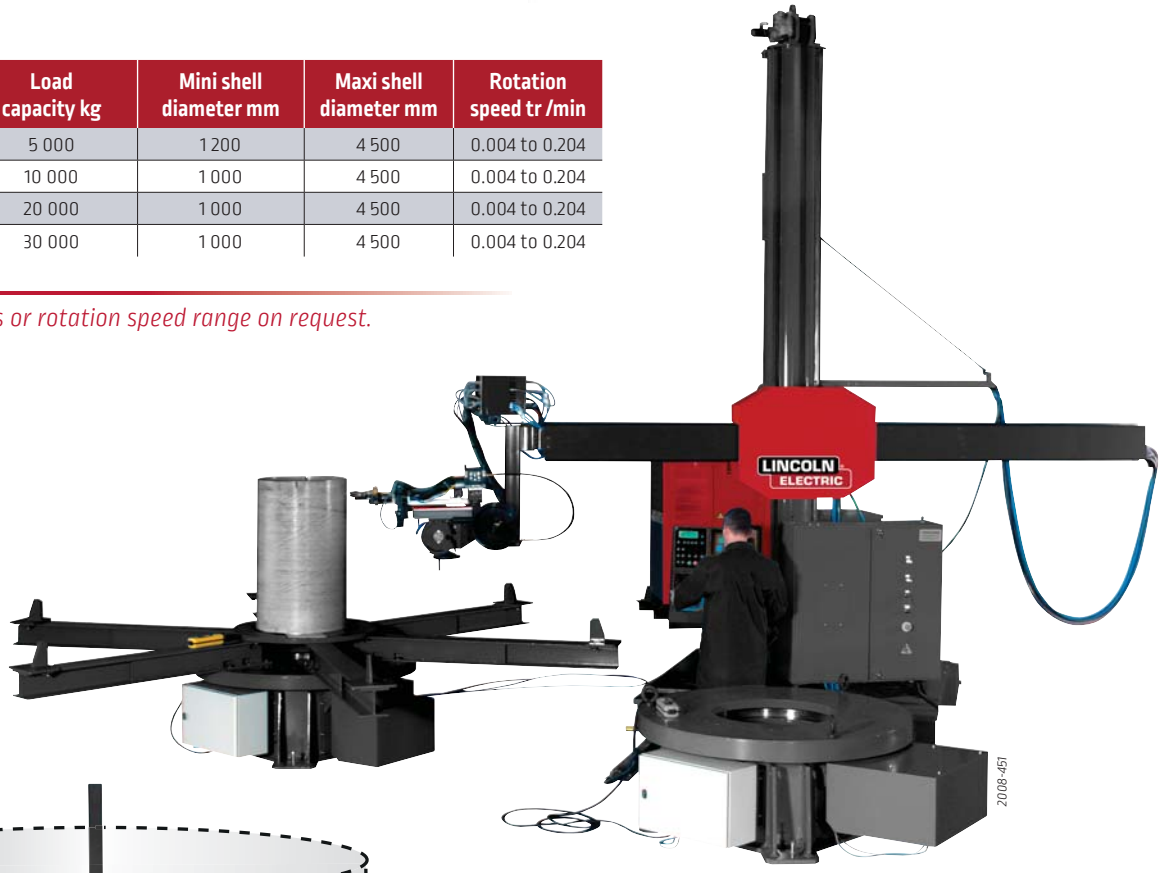

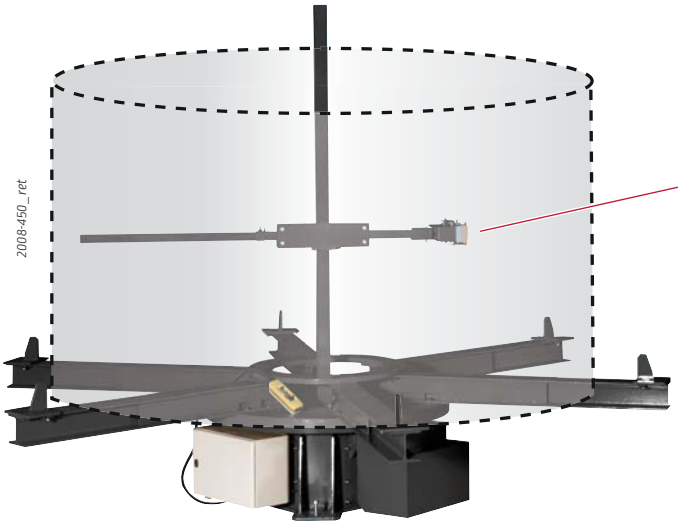

Backing gas device

The backing gas device mounted on turntable, complete the turn-key solution of plasma or TIG welding column and boom.

A man hole in the turntable allows the operator to adjust the backing gas device inside the shell.

PythonX

All in one solution for infrastructure segment

PythonX® is the N°1 robotic plasma structural steel fabrication system in the world, and is trusted by more end users with over 300+ systems installed worldwide.

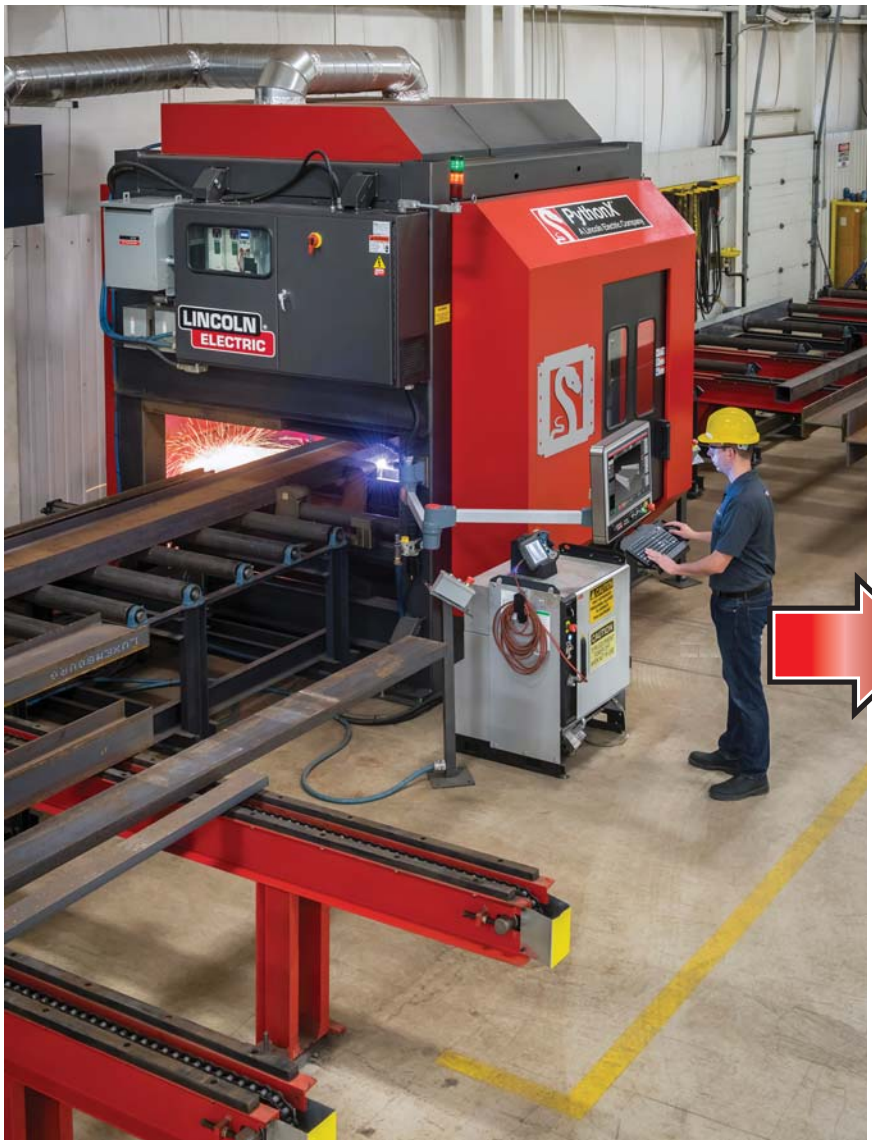

A versatile and complete solution that automates processing operations in your fabrication shop while providing you with increased productivity. Unmatched Cut quality, predictable and consistent throughput as well as our signature simplicity of operation.

PythonX® continues to develop and provide innovative solutions that help your business where it counts the most… your bottom line.

Simple to use

1. Load the raw part for processing
2. Open a part file on the HMI
3. Press start

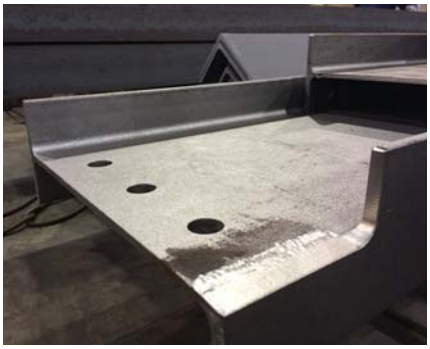

Streamlining a path to more efficient production.

Efficiency is the key advantage when it comes to fabricating structural steel. Only a single operator and no programming are required to operate the **PythonX®**.

PythonX® delivers the advantage of completely finished pieces at the LOWEST COST PER TON versus your competitor's old technology.

How long would it take to fabricate this beam in your shop ?

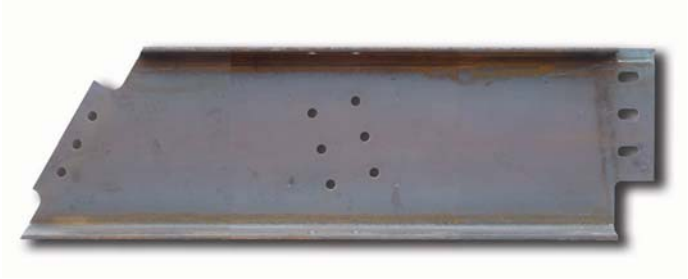

- 13 bolt holes.
- 3 slots.
- 3 copes.
- Web trim.
- 9 letter piece marks.
- Miter cut/trim.
- Flange notch.
- 2 flush flange cuts.
- 4 layout marks.

Only 4 minutes 26 seconds with PythonX®

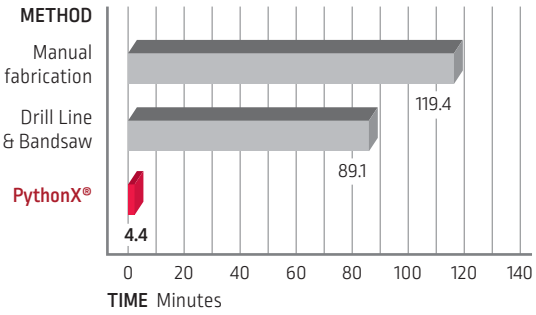

A new standard for what is already the most advanced structural steel fabrication system in the world.

New features and capabilities let you get more done, far quicker and with even greater ease, making **PythonX®** a phenomenally powerful part of your facility and profit center:

- Intuitive touchscreen,
- 3D part visualization and rotation,
- Torch path simulation,
- Cycle time estimates,
- Production queue display,
- Consumable monitoring,
- Production reporting,
- Operator languages added regularly.

A solution for every application

Plasma cutting

The plasma cutting process, as used in the cutting of electrically conductive metals, utilizes this electrically conductive gas to transfer energy from an electrical power source through a plasma cutting torch to the material being cut.

The basic plasma arc cutting system consists of a power supply, an arc starting circuit and a torch. These system components provide the electrical energy, ionization capability and process control that is necessary to produce high quality, highly productive cuts on a variety of different materials (carbon steel, stainless steel, aluminum, copper.) and thicknesses (from 0.5 to 220 mm).

Plates, round tubes, H or U beam, Channels, HSS tubes, angles....
Plasma, oxycutting, bevels, straight cuts, High quality Holes,
high quality plasma marking, tube cutting with bevel...

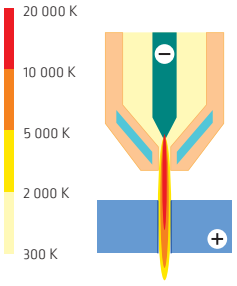

Principle of the plasma cutting process

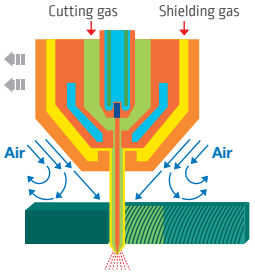

High Technology
DUAL GAS: double gas injection

Thickness range

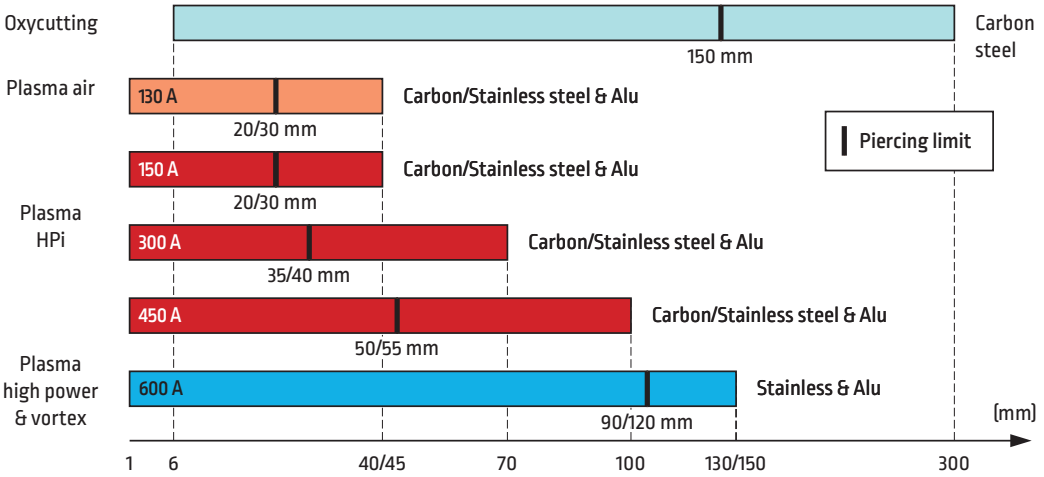

Flame cutting

The oxyfuel process is the most widely applied industrial thermal cutting process. It can cut thicknesses from 3 mm to more than 1000 mm. The equipment is low cost and can be used manually or mechanised. There are several fuel gas and nozzle design options that can significantly enhance performance in terms of cut quality and cutting speed.

A mixture of oxygen and the fuel gas is used to preheat the metal to its "ignition" temperature which, for steel, is around 1150 °C (bright red heat) but well below its melting point. A jet of pure oxygen is then directed into the preheated area instigating a vigorous exothermic chemical reaction between the oxygen and the metal to form iron oxide or slag. The oxygen jet blows away the slag enabling the jet to pierce through the material and continue to cut through the material.

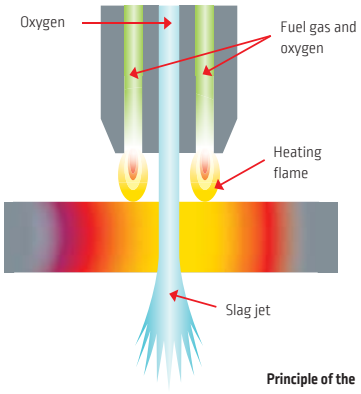

Principle of the oxyfuel process

TOTAL SOLUTION PROVIDER

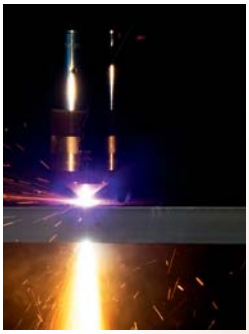

Advance cutting process
and improved data base parameters

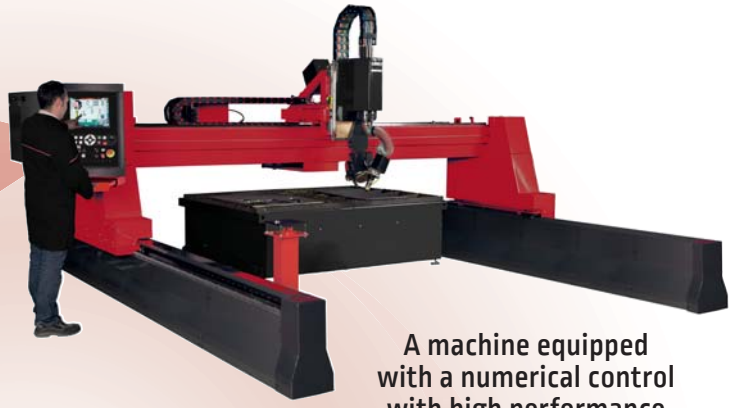

A machine equipped
with a numerical control
with high performance

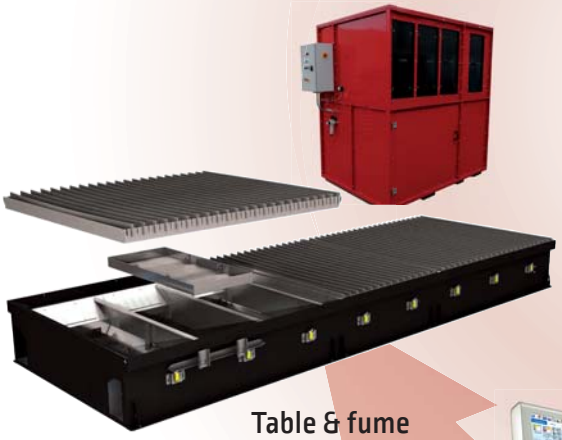

Table & fume
extraction

Efficient software
and post processor

Technician with
cutting expertise

ISO 9013: Main cutting quality criteria

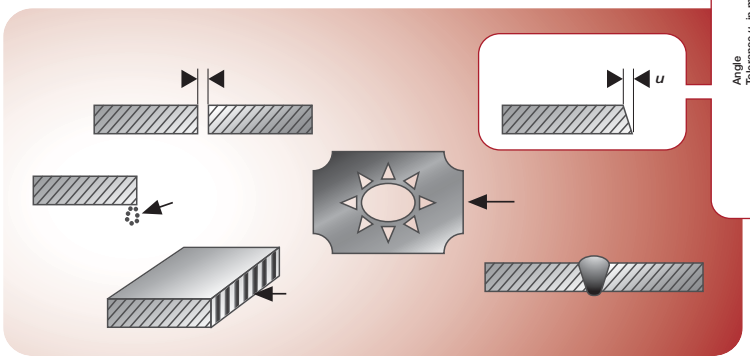

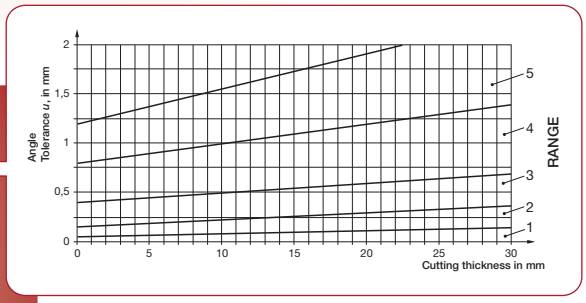

Various features can be evaluated to understand the cutting quality.
EN standard ISO 9013 retains mainly three:

- Geometric accuracy,
- Roughness surface,
- Angle / concentricity.

This last criteria determines, based on the thickness, the perpendicularity tolerance in five classifications (ranges 1 to 5).

HPi Plasma cutting complies with EN 1090 infrastructure manufacturing standard.

CE
EN 1090
COMPLIANT

It sets the requirements for the execution of steel structures to ensure appropriate levels of mechanical resistance, stability, service ability and durability.

Thermal cutting and particularly plasma cutting HPi is identified as a process that can be used in the realization of steel structure: cuts & bolt holes

PLASMA CUTTING RANGE

High accuracy and productivity CPM 400

NERTAJET HPi

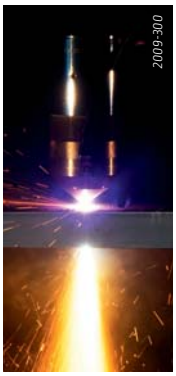

NERTAJET HPi - 150 A
NERTAJET HPi - 300 A
NERTAJET HPi - 450 A

Dry plasma cutting with CPM400

The CPM400 torch has been specifically designed to process steels, stainless steel and aluminium with dry HP cuts up to 400A.

Its dual flux technology gives it various advantages:

- Cut with reduced angles.
- Marking with high quality.
- Protection of cut faces for greater weldability.
- Longer life time of its wear materials.

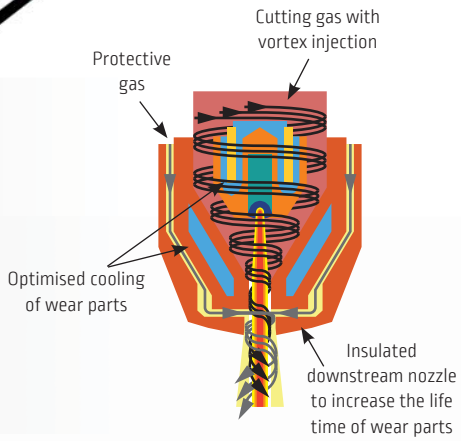

Industrial plasma LC 125M

FLEXCUT 125

Processes

Plasma Cutting, Gouging and Marking

LOW OPERATION COSTS

BEST AIR CUTTING AND MARKING PERFORMANCE

EASY TO SET UP

EASY TO USE

Heavy power CPM 600Wi

NERTAJET HPi

NERTAJET HPi - 600 A

Water vortex plasma cutting with CPM600wi

The CPM600wi torch is designed to process stainless steel and aluminium with HP water vortex cuts up to 600 A.

Its dual water VORTEX flux gives it various advantages:

- Work on water or immersed, thereby reducing inconveniences in terms of noise and light below normal tolerance thresholds,
- Wide operating range: from 1 to 90 mm,
- Cut with reduced angles,
- Protection of cut faces for greater weldability,
- The cutting area affected from a thermal point of view and deformation of the pieces is considerable reduced,
- The cost for use on stainless steel or aluminium is extremely competitive: good cutting speed, cost of fluids, life time of wear parts, even very powerful ones...

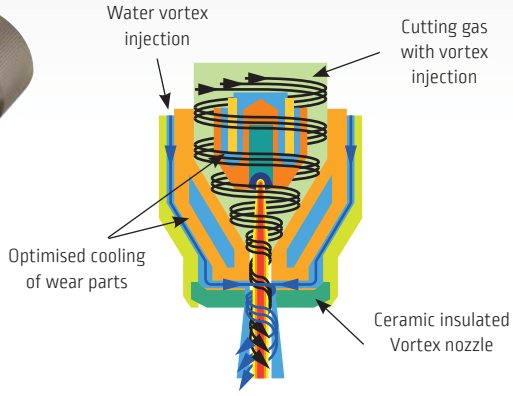

Power

Thickness range* of the Lincoln Electric automatic plasma cutting installations

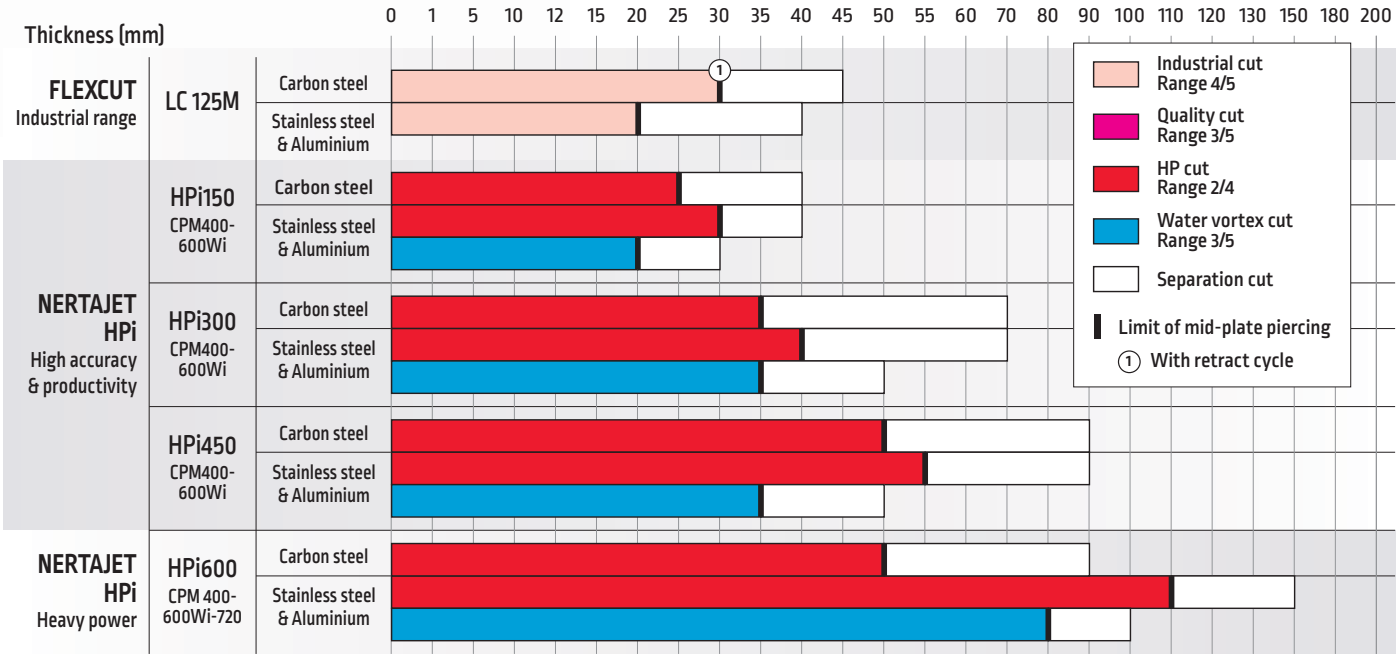

** Indicative values*

FLEXCUT 125

125A Powerful, 100% Air Plasma

Make the cut in the big game

Low Operating Costs

Keeping costs under control is important to any efficient plasma cutting operation. The FlexCut 125 ensures up to six times longer consumable life and maintains faster cut speeds - both of which deliver higher productivity over less time. The completed cut is virtually dross-free, which means less secondary processing.

Best Cutting and Marking Performance

The FlexCut 125 is designed to deliver on all fronts as the only machine in it's class that allows you to plasma mark. Whether you are piercing up to 30 mm* mild steel material in a mechanized cutting application, or cutting expanded metal, you can count on less edge bevel and superior edge quality compared to competing cutting systems.

Easy to Set, Easy to Use

The sooner your plasma cutting operation can get started, the more productive it will be. The FlexCut 125 plasma cutter requires very little time or effort to get down to the business of cutting. Controls are simple, which makes setup easy, and you can get a consistent and reliable arc without needing to rely on high-frequency start systems. The simple user interface provides a means to configure output pressure based on torch length.

** With retract cycle*

CUT SPEED COMPARAISON

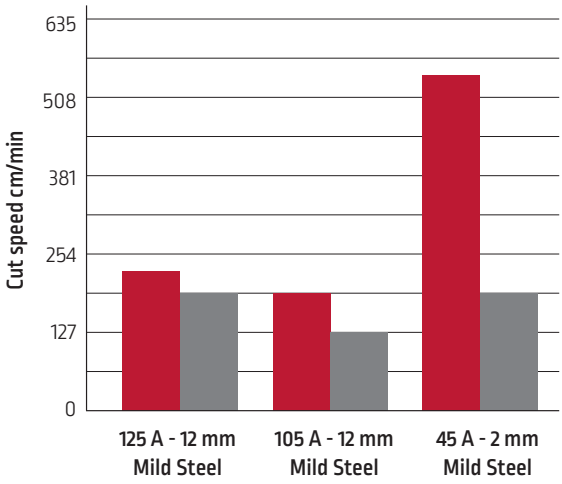

ELECTRODE LIFE COMPARAISON

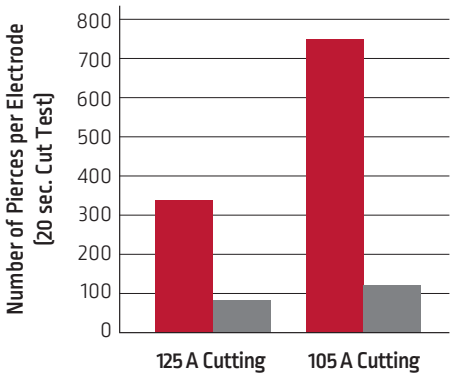

FLEXCUT 125 - SPECIFICATIONS

Input Power Voltage/Phase/Hertz	380/460/575
Rated Output: Current / Voltage / Duty Cycle	125A/175V/100%
Input Current @ Rated Output	3PH/100% 40/40//40/33/28
Output Range	3PH / 20-125A
Air Pressure Required	6.2 to 8.3 Bar
Air Flow Rate	260 l/min at 6.2 Bar
H x W x D (mm)	526 x 311 x 648
Net Weight (kg)	53.5

NERTAJET HPi

NERTAJET HPi is the evolution of the traditional plasma process representing an alternative to laser cutting:

2014-391_ret

2014-396

2014-399

Quality:

This cutting tool is used to obtain the following:

- Dimensional and geometrical accuracy of the pieces cut on a wide range of materials.
- Quality of the surface of the cut faces (roughness far below than that of a laser).
- A cut angle (range 2 to 4 in accordance with ISO 9013).
- Holes with a remarkable straightness on carbon steel with **HOLE MASTER**.
- Cuts with no adhering slag.
- Quality maintained thanks to the optimized life time and wear compensation function **CDHC** of plasma components.

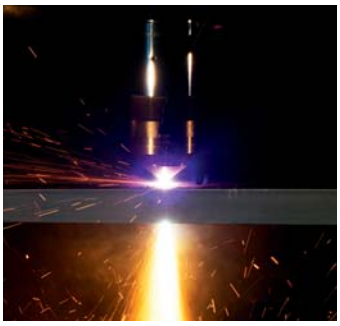

Productivity:

- Possibility of adjusting the electrical power in relation to the desired speed for each thickness.
- Possibility of combining several NERTAJET HPi plasma installations.
- Possibility of combining several speed ranges on the same geometry with the HPC DIGITAL PROCESS control.
- Possibility of combining cutting and marking operations.
- Possibility of automatically managing the adjustment of cutting parameters.
- Possibility of using the **CYCLE BOOST** and **INSTANT MARKING** functions, thereby reducing the marking and cutting time.

Operating costs:

With NERTAJET HPi systems, everything contributes to obtain an economical cutting price:

- Extended life time for wear parts,
- Low gas consumption unlike a laser,
- High cutting speed associated with the advanced **CYCLE BOOST** and **INSTANT MARKING** functions,
- Cutting with several NERTAJET HPi plasma systems (e.g. dual torch).

2014-398

Here are the plasma torch nose-pieces used with NERTAJET HPi:

2012-751

CPM400: for HP dry cutting on steel, stainless steel and aluminium up to 400A @ 100%.

CPMwi: for high power dry cutting or water vortex cutting on stainless steel or aluminium up to 600A @100%.
Allows cuts up to 150mm.

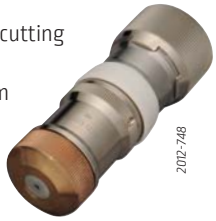
2012-748

“Easy Wear Parts Storage” dispenser:

For a simplified management of wear parts and an accurate follow-up of your stock levels.

This visual storage tool is alsoused to prevent any risk of assembly errors for wear parts.

2012-759

NERTAJET HPi

Fully automatic gas console plasma installation NERTAJET HPi

HPi150 or HPi300

HPi450 or HPi600

Range of thicknesses for HPi 150, HPi 300 and HPi 450

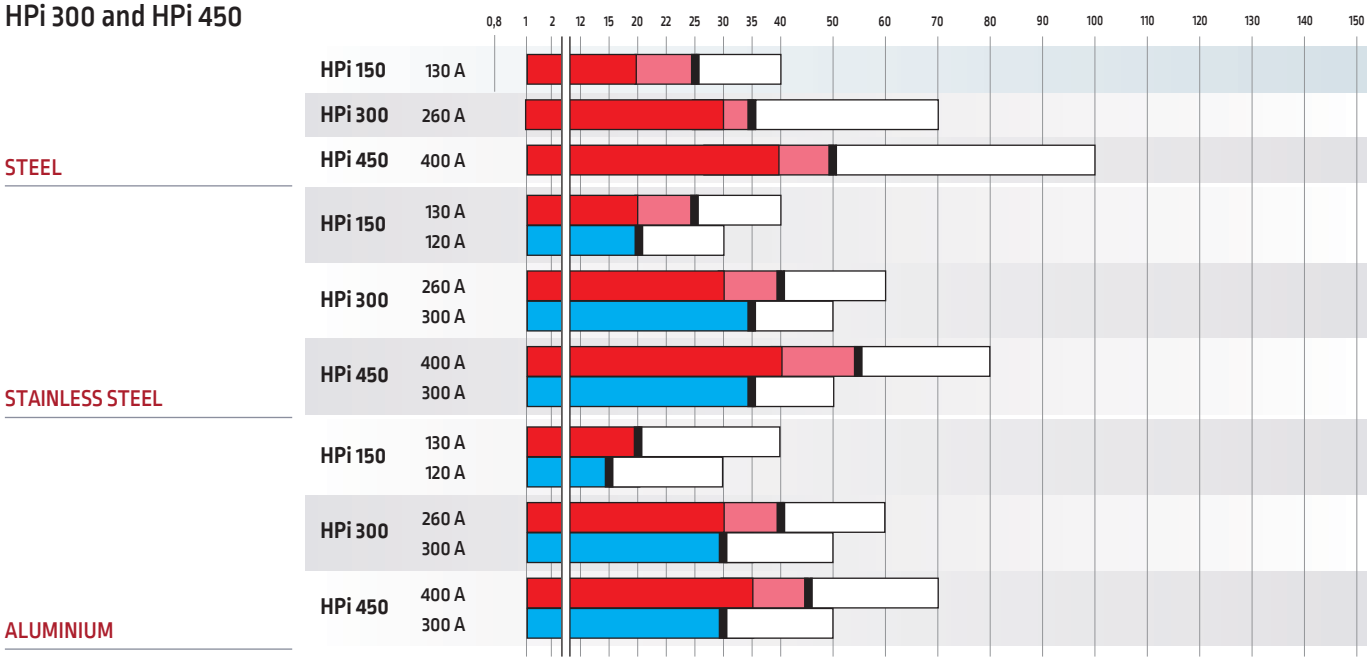

Range of thicknesses for HPi600

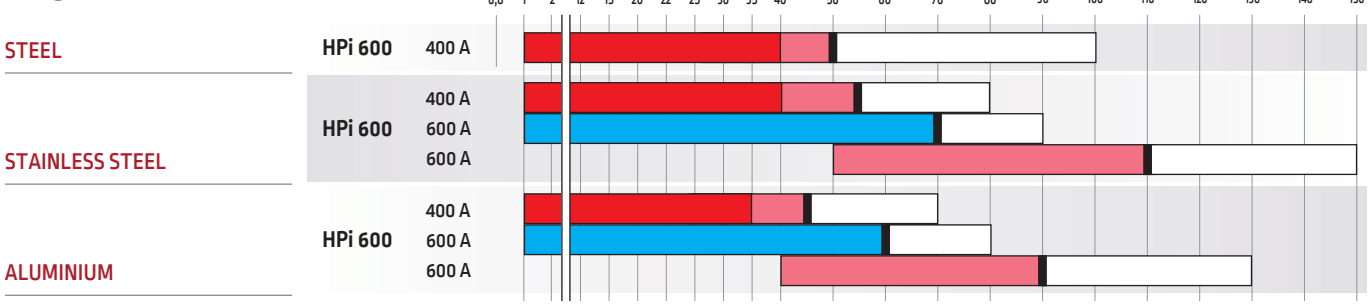

Key

- **HPi cut** — With few or no flashes, Full mid-plate striking
- **HPi cut** — With just a few flashes, Full mid-plate striking
- **HPi Water Vortex** — Full mid-plate striking
- Limit of mid-plate piercing
- **Separating cut** — Sheet metal edge striking

Processes use with NERTAJET HPi:

- Cutting: O2/Air, O2/O2 , N2/Air, N2/N2, N2H2(5%)/N2, ArH2(35%)/N2, N2/WATER
- Marking: Ar/Air, Ar/N2

NERTAJET HPi system components

- Plasma power source NERTAJET HPi150 & HPi300.
- Autonomous cooling unit FRIOJET 300i or FRIOJET 720.
- Automatic console gas BRGi: managing automatically up to 6 different gas.
- Torch connection console BRTi.
- Numerical tool holder THDi integrating choc sensor. 160mm or 350mm - 15m/min.
- Automatic cycle CA4 interconnected with numerical CNC HPC or HPC2.
- Set of leads adaptable for all machines sizes.

Digital control system:

- **HPC1 or HPC2:** Numerical control fitted on a number of LINCOLN ELECTRIC machines. It manages the whole of the cutting machine: from the trajectory to the process. The fact of having a user friendly nature and being easy to use make it a unique tool acclaimed on the thermal plasma cutting market.
- **TeacHPi:** Its autonomous interface is used to control the HPi plasma system, with it's cycle box. They are interconnectable with a wide variety of machines, robotized systems or mechanizations.

Main characteristics

Power supply	HP150			HP300		
Three-phase power supply (+:- 10%)	230 V	400 V	440 V	230 V	400 V	440 V
Absorbed current	101.2 A	64.3 A	55.2 A	101.2 A	64.3 A	108.7
Cos PHI	0.93	0.85	0.9	0.93	0.85	0.92
Frequency	50/60 Hz					
Duty factor	100% @ 40 °C 150 A - 230 V			100% @ 40 °C 300 A - 230 V		
Protection rating	IP21S					

To calculate the electrical consumption of HP450 or HP600, add the features of HP150 to those of HP300 or multiply by 2 those of HP300.

Data	FRIOJET 300i	FRIOJET 720
Primary Supply 50/60 Hz (+/- 10%)	1 x 230 V	3 x 400 V
Absorbe current	11.6 A	8.8 A
Liquid flow	0.33 m³/h	0.67 m³/h

CPM400

Max. flow (l/min)	HP150	HP300	HP450	HP600
Argon (Ar)	7	11	11	11
Oxygen (O_2)	20	28	40	40
Air (N_2O_2)	40	130	130	130
Nitrogen (N_2)	92	110	110	110
Nitrogen/Hydrogen (N_2H_2 - 5%)	17	17	17	17
Argon/Hydrogen (ArH_2 - 35%)	40	49	49	49

CPM600Wi

Max. flow (l/min)	HP150	HP300	HP450	HP600
Argon (Ar)	25	26	26	30
Nitrogen (N_2)	31	45	45	70
Water	1.5	2	2	2

Gas supply pressure: 9,0 bar.
In the case of **VORTEX**, add **demineralised water** (supply at 4 bar)

Special equipment

Torch holder 800

This tool holder 800 mm travel can cut on dished ends with a plasma torch in straight position. Its robust design gives it great rigidity even when the tool holder is fully deployed.

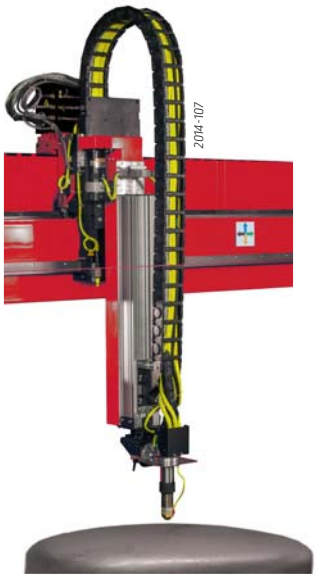

Plasma bevelling following X and/or Y axis

For bevels with a HP plasma torch following X and/or Y axis of the machine. This option can be provided in two configuration:

- Straight bevel cut following X,
- Straight bevel cut following X & Y.

Those 2 options are equipped of a graduated sector to facilitate the angle torch adjustment. A rotation bloc is added to be able to do bevels following the two axes with the second version of the option.

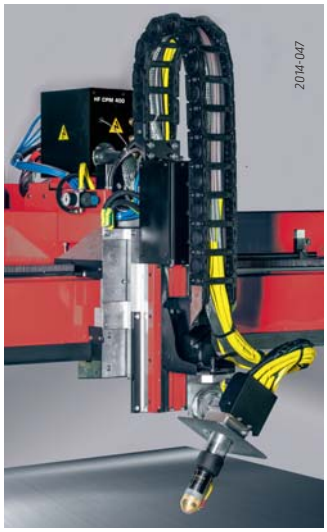

OXYCUTTING RANGE

A large range of oxyfuel cutting torches with performance and flexibility

For oxycutting of non or low alloyed steels from 3 to 300 mm, Lincoln Electric offers a full range of oxyfuel cutting torches: OXYCUT G1, OXYCUT MACH, MACH HP or MACH HPi to install on semi automatic machines (gantry machines) or fully automatic machines (gantry machines type OXYTOME HPC).

According to your needs, you will choose, mixing nozzles with the OXYCUT G1, and cutting torches internal mixing with high speed and high quality with OXYCUT MACH, MACH HP or MACH HPi.

OXYCUT MACH HP

- Cutting capacity 6 to 300 mm.
- Productivity.
- Cutting quality.
- Fitting of consumables without tools: easy & quick.
- Lifetime.
- Piercing up to 150 mm.

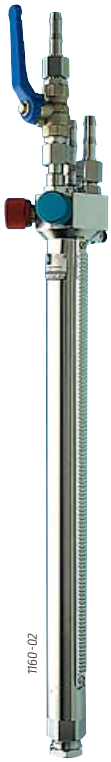

OXYCUT G1

- Cutting capacity. from 3 to 300 mm.
- Torch in short or long version.
- Robustness.
- According to the price level and the quality needed, possibility to use nozzles from manual torch.

OXYCUT MACH OXY

- Cutting capacity from 6 to 300 mm.
- Cutting quality.
- Robustness.
- Easy to use.

OXYCUT MACH HPi

- Internal ignition.
- Cutting capacity 6 to 300 mm.
- Productivity.
- Cutting quality.
- Fitting of consumables without tools: easy & quick.
- Lifetime.
- Piercing up to 150 mm.

MACH HP & MACH HPi

Tool free nozzle change

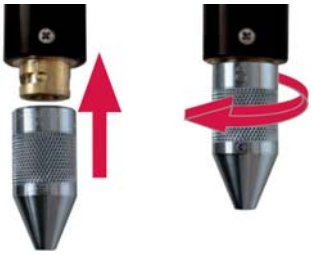

Thickness 6 to 300 mm

High speed cutting nozzles

System OxyCOOL

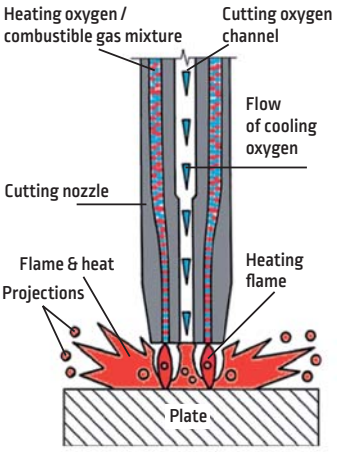

Type of cut

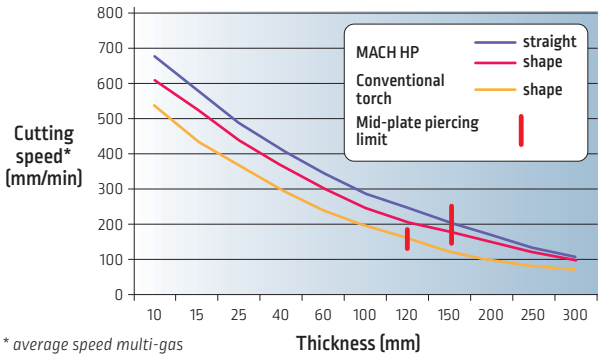

** average speed multi-gas*

Systems of gas regulation fully controlled by HPC 2 with full automatic cycle:

		OXY Essential	OXY HPi
Number of torches		4 (1 module of 4)	12 (up to 3 modules of 4)
Gas regulation		Automatic gas	
Maximum thickness: Cutting / Piercing		200 / 150 mm	300 / 150 mm
Tool holders	150 mm stroke	Yes	
	250 mm stroke	-	Yes
	Cable chain	-	Yes
	Speed	2 m/min	2,5 m/min
Oxy torches	MACH OXY	✓	
	MACH HP	✓	
	MACH HPi	✓	
Fixed electric ignitor*		Option	-
OXY SAFE PIERCING Including choc sensor (Probe detection) (igniter* and retractable probe)		Option	Standard
Beveling tool with tilting nozzle**		✓	
Strip cutting tool**		✓	
VXK cutting tool		1	2

** : integrated ignitor with MACH HPi / ** : use without capacitive probe & automatic ignition*

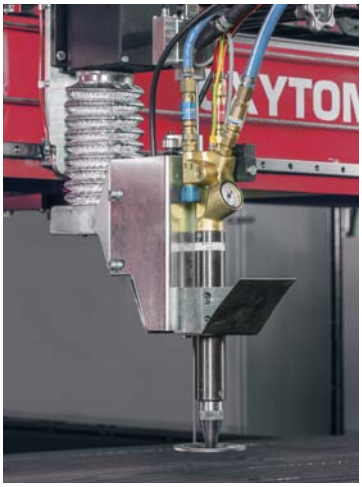

EQUIPMENT FOR OXYFUEL PROCESS

Bevel tool for oxyfuel torch

This tool easy to install and use gives the possibility to realize different kind of simple bevel following a straight line: standard V bevel or tapered bevel (bevel over 45° cut on plate edge)

Tapered bevel (bevel over than 45°)

This tool is well adapted to realize tapered bevel on plate edge with or without the assistance of a mechanical sensor to follow the distortion of the plate.

Bevelling block V X K

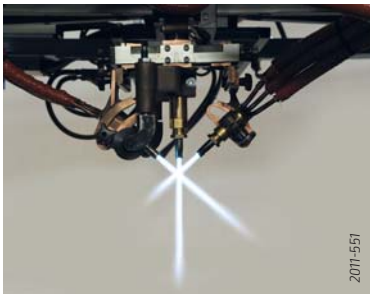

For bevels parallel to the axes using mechanical sensors.

It allow to work on thicknesses up to 70 mm.

The system is equipped with 3 short oxyfuel torches and give the possibility to realize V, Y, X and K bevels.

Each side oxyfuel torches can be adjust following an angle from 10 to 45°.

The two robust rollers of the mechanical sensor are cooling by compressed air. In option, the VXK can be fit on electrical tool holder with a quick mechanical exchanger. It gives the possibility to workwith a standard straight cutting torch or with a VXK bevelling block.

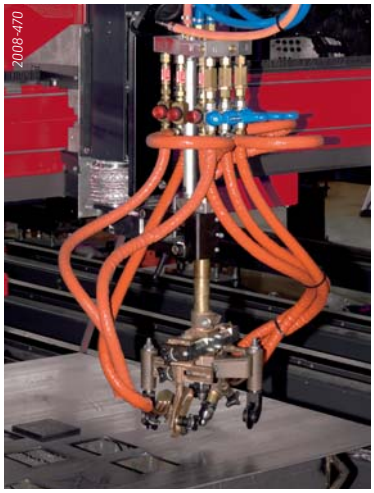

Strip cutting systems

Tools to realize strip cutting. Two systems are available:
One system to fit directly on the oxy-fuel torch.
The system use two set of nozzles.
The distance between each other is adjusted by opening more or less the tool. Distance between the 2 nozzles: from 40 to 400 mm.

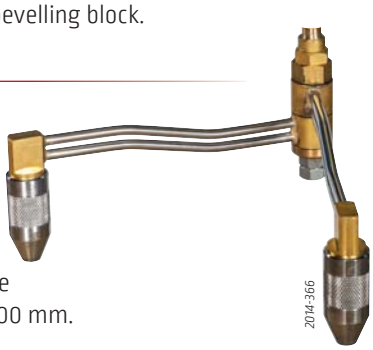

Set capacitive sensor/automatic ignition for OXY torch with OXY SAFE PIERCING

Proposed in the basic version on OXYTOME 2, OXYTOME RS HPi, OXYTOME TWIN HPi and in option on EUROTOME 2, this unique system on the market, allows to retract during phases of piercing both the sensor and the igniter. OXY SAFE PIERCING authorizes mid plate piercing up to 150 mm thickness in automatic cycle without any disassembly of the probe or the igniter.

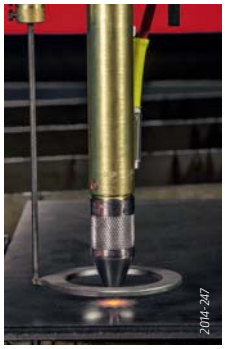

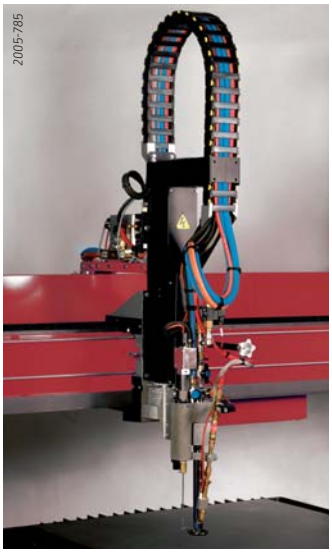
2005-785

Torch holder PO 150 for oxyfuel

Torch holder 150 mm travel, robust and specially designed for the implementation of thermal processes.
Also available in 250 mm travel.

2014-059

High temperature torch holder

It is especially adapted for cutting very thick material in flame cutting.
Its robust design enables it to support the high temperatures found on flame cutting applications up to 900 mm thick.

HPC Automatic indexing

Numerical automatic adjustment of the distance between two or many cutting tools. This option can be managed automatically with the nesting software. Inside a same program, different distances can be adjusted between the torches depending the parts sizes to cut. This option is mainly used with oxy-fuel process. Possibility to use it from 2 to 8 torches. This option is fully managed by HPC thanks to a very nice control interface.

2014-204

Machine thermal protection

The machine can be equiped with different thermal protection able to work in the more hostile condition especially when customer cut with oxyfuel process with many tools or on very big thicknesses.

2016-490

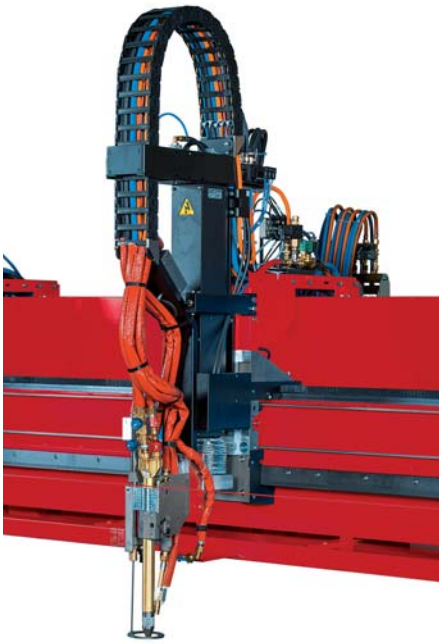
2016-545

Electric clamping

System to clamp slave(s) tool(s) holder(s) from the CNC console or on the tool holder. It is possible for example to deselect slaves tool holders and to park them directly from the CNC console.
Maximum 2 tool Holders. For more, use automatic indexing.

CUTTING MACHINES RANGE

A wide range from the simple mechanised carriage to fully automatised large capacity machines, from torch for straight cut to the 3D plasma cutting tool.

The complete offer of Lincoln Electric can answer to all your cutting needs with oxycutting and/or plasma process.

The various tools and options will enable you to produce parts with shapes, with or without bevel for occasional use or intensive production, on small or large format sheet metal.

OXY/PLASMATOME 2 HPi

EUROTOME 2

2016-318

TAGLIATUBI, and PYROTOME SE

2188-05

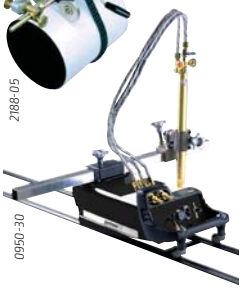
0950-30

PYROTOME CNC

2015-486

TORCHMATE

EASYTOME

2015-483

Examples of equipment and options:

- CNC HPC digital process,
- NERTAJET BEVEL HPi,
- Cutting of tube,
- Numerical drilling unit,
- Micro-percussion marker,
- etc...

2007-489

2015-679

2012-581

2012-570

2011-173

2010-282

OXY/PLASMATOME HPi RS & Twin

CYBERTOME

ALPHATOME 2 HPi

OPTITOME 2 HPi

Main characteristics, equipment and options

MACHINES	Transversal stroke													Useful longitudinal stroke	PLASMA (maximal number)			OXY (maximal number)		Main technological options			Table	
	1 m	1.5 m	2 m	2.5 m	3 m	3.5 m	4 m	4.5 m	5 m	5.5 m	6 m	6.5 m	...12 m		Air	HPi	High Power	Manual	Auto	Tube	NERTAJET BEVEL HPi	Drilling unit2.5	Dry	Water
PYROTOME CNC														3	1	-	-	1	-	-	-	-	X	X
TORCHMATE														2.5	1	-	-	-	-	-	-	-	-	X
EASYTOME														1.5 to 4	1	-	-	-	-	X	-	-	X	-
OPTITOME 2														1 to 6	1	1 (300 A)	-	1	-	X	-	-	X	-
ALPHATOME 2														3 to 24	-	2	-	-	-	X	-	-	X	X
EUROTOME 2														3 to 15	2	1	-	-	4	X	-	-	X	X
OXY/PLASMATOME 2 HPi														3 to ...	2			-	6	X	-	-	X	X
OXY/PLASMATOME RS HPi														3 to ...	2			-	8	X	-	-	X	X
OXY/PLASMATOME TWIN HPi														3 to 24	2			-	3	X	X	X	X	X
CYBERTOME														3 to ...	2			-	12	X	X	X	X	X

Portable carriages TAGLIATUBI & PYROTOME SE

Two pratical and functional carriages for ancillary cutting jobs in the workshop and on site.

TAGLIATUBI

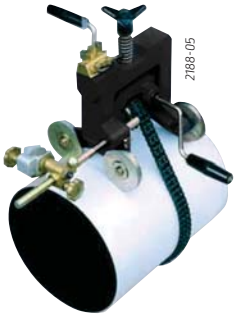

The TAGLIATUBI carriage allows the mechanised oxycutting of tubes with outside diameter vayring from 6" (150 mm) to 48" (1 200 mm) and having a thickness from 5 to 50 mm.

It is adapted for the execution of cuts:

- Straight and with bevel +/- 45° with one oxyfuel torch,
- X and Y bevel when the machine is equipped with two torches and its additional accessories (in option).

PYROTOME SE, the carriage on rails

The PYROTOME SE is a portable multiprocess carriage for straight or V bevel cuts. Its electronic speed regulation (10 to 125 cm/min) and robustness make it the indispensable tool for intensive use.

The PYROTOME SE basic version is equipped for oxycutting (plasma cutting on request)

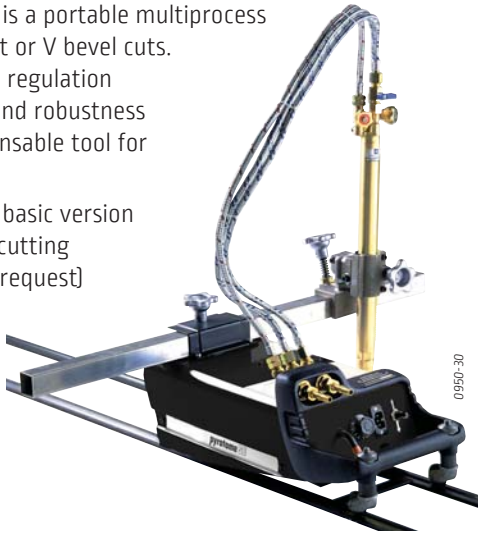

PYROTOME CNC

PYROTOME CNC is a small mechanised machine integrating a digital controller for cutting on metal sheets format of 1 000 x 2 000 mm or 1 500 x 3 000 mm.
The programming is carried out from a library of standard shapes integrated in the digital controller or from the nesting software (in option). Equipped with one oxycutting torch or one plasma air installation, PYROTOME CNC is simple to implement, versatile, rugged and economical.

Version		1020
Cutting width (mm)		1 000
Cutting length (mm)		2 000
Total width (mm) *		1 400
Total length (mm) *		2 500
Total height (mm) *		500
machine Weight (kg) * Excluding table		85
Traverse Speed		6 m/min
Cut capacity / piercing capacity	FLEXCUT 125	40 mm / 20 mm
	OXYCUT G1	80 mm / 30 mm

** Excluding safety zone & cutting table*

TORCHMATE

Easy to use, versatile, efficient and cost effective.

The TORCHMATE concept relies on fast and simple set up. Machine frame consist in a strong table incorporating water mixed with plasma green and plate support for fume filtration.

Easy To Use: An intuitive touch screen HMI with an integrated 27-part shape library will get you cutting immediately. There's also an optional clip art gallery with over 6000 files for fast and easy art projects.

Possible to work with external nesting software to generate complete nested program and load programs with USB or network.

The machine is simple to use and maintain.

Through the FLEXCUT 125 CE technology with compressed air, the machine produces a high level of quality for the cutting on carbon steel & stainless steel with cost efficiency: high life time, reduce post process operations with less dross and better edge quality.

Version	4800 for plates 1000 x 2000
Cutting Width (mm)	1 020 mm
Cutting lenght (mm)	2 030 mm
Total width (mm) *	1 880 mm
Total lenght (mm) *	2 895 mm
Total height (mm)	1 600 mm
Machine Weight + water capacity	570 Kg / 405 liters
Traverse Speed	12.7 m/min
Traverse Speed	12.7 m/min
Cut capacity / piercing capacity	25 mm / 20mm

** Excluding safety zone & cutting table*

Options: micro vibration marker

EASYTOME

Monobloc plasma cutting machine

Easy to use, versatile, efficient and cost effective.

The EASYTOME concept relies on fast and simple set up, by its design software and integrated tool path, the procedure for cutting one or more pieces is extremely simple and fast.

Brushless motor system with planetary reduction provides accuracy, fluidity and dynamism of movements.

The rugged monobloc frame integrates table with compartments, the machine is simple to use and maintain.

Associated with fume extraction and treatment range, the machine offers great efficiency and a high-quality working environment.

Through the FLEXCUT 125 CE technology with compressed air, the machine produces a high level of quality for the **plasma cutting and marking** with cost efficiency: high life time, reduce post process operations with less dross and better edge quality.

Easytome is available in 2 versions: Essential and Advance.

Version	Essential	Advance
Motorisation	Step by step	Brushless
Screen	Not tactil (mouse)	Tactil
Table	Designed for sheet metal work	Rugged contruction for boiler maker
Taille	1020 & 1530	1020 & 1515 1530 & 2040

Main technical characteristics:

- Plasma cutting & marking in automatic with same set of torch consumables,
- Travel speed 21 m/min,
- Numerically encoded tool holder managed by the numerical controller,
- Data base of plasma parameters integrated,
- Options: Cut of tube, oxyfuel, micro vibration marker.

Version	1020	1515	1530	2040
Cutting Width (mm)	1 100	1600	1600	2100
Cutting lenght (mm)	2 100	1600	3100	4100
Total width (mm) *	1 770	2000	2000	2500
Total lenght (mm) *	2800	2200	3800	4800
Total height (mm)	1 350	1350	1350	1350
Essential machine Weight (kg)	1000	-	1200	-
Advance machine Weight (kg)	1000	1000	1700	2400
Traverse Speed	Advance: 21 m/min / Essential: 15 m/mi			
Cut capacity / piercing capacity	45 mm / 30mm			

** excluding safety zone and equipments (plasma power source, filter, etc...)*

OPTITOME 2

Monobloc plasma cutting machine: robust, versatile and efficient

This machine is designed for use with NERTAJET HPi plasma installations to achieve very high cutting quality. Its single-piece construction is highly sturdy, allowing simple and quick assembly. This machine can handle heavy-duty production work, up to 300A.

NERTAJET HPi: the new generation of high-precision plasma installations developed by Lincoln Electric, with advanced functions:

- CYCLE BOOST and INSTANT MARKING: for shorter production times,
- MASTER HOLE and CDHC: for improved cutting quality,
- TOUCH & GO, SOFT PIERCING and TWIN DETECT: for greater simplicity in use.

Main technical characteristics:

- Travel speed 15 m/min (according to EC machines regulation),
- Brushless motorisation guaranteeing accuracy and fluidity of movement,
- Beam height to place rectangular pipes up to 200mm high.

2014-685

The table has compartments at every 600 mm that helps extend the effectiveness of extraction.

Each compartment has air diffuser boxes:

- To protect the sides of the table from heating,
- To protect the air extraction opening hatches,
- To collect the cutting slag or pieces.

Version	1530	2010	2040	2060
Cutting width (mm)	1500	2000	2000	2000
Cutting length (mm)	3000	1000	4000	6000
Total width (mm) *	2504	3050	3050	3050
Total length (mm) *	4375	2550	5325	7380
Total height (mm) *	2000	2000	2000	2000

** excluding safety zone and equipments (plasma power source, filter, etc...)*

	Plasma process	OXY process
Number	1	1 (option)
Type	NERTAJET HPi 150 NERTAJET HPi 300	OXYCUT MACH OXY MACH HP

Options

Laser positioning
Tube cutting
Drawers for cutting table
Forklift handling

ALPHATOME 2

High precision plasma cutting machine: high quality, robustness and productivity

High quality plasma cutting requires more and more precision. The ALPHATOME 2 allows cutting and marking by plasma process on non-alloy or low-alloy carbon steel, stainless steel and light alloy plates with a thickness from 0.5 to 50 mm.

Its linear guideline systems fully protected, double beam concept with central cutting tool, fluidity of movement and dynamism make a machine specially designed for HP plasma cutting at intensive use.

Main technical characteristics:

- High speed up to 22.5 m/min (15 m/min for Essential version),
- Numerical control by HPC digital process: management and control fully automated of plasma processes,
- Brushless motorisation ensuring accuracy and fluidity of movement,
- Rails with roller bearing,
- Motor gearboxes with play adjustment.

ALPHATOME 2 is available in 2 versions

- **Essential protect:**

basic version included simple protection of rails and racks.

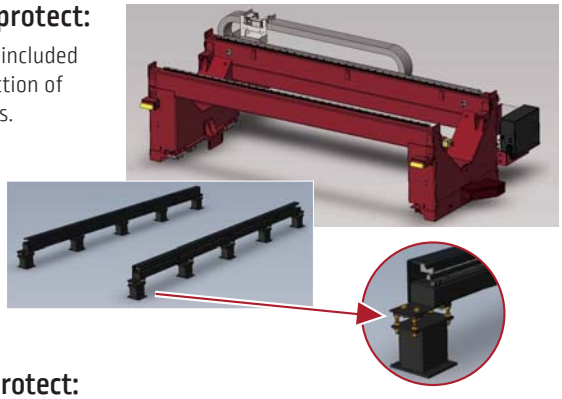

- **Advance protect:**

Optimum version with quick-opening side doors, retractable curtain on the front and the back of the beam, full protection of rails. It fits perfectly in the workshop environment by reducing noise and visual pollution.

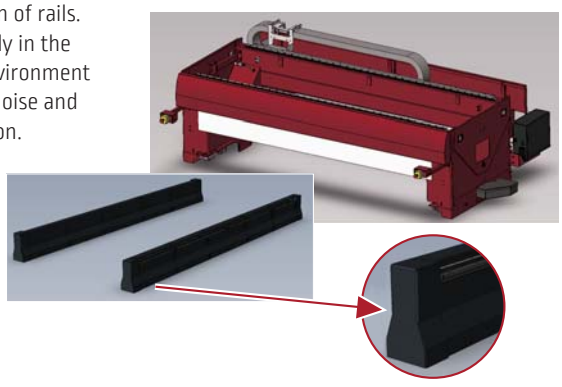

Number of cutting tool	Up to 2
Type plasma	NERTAJET HPi 150 NERTAJET HPi 300 NERTAJET HPi 450
Main options	• Visio Process & remote control. • Cut of tube. • Micro percussion marker. • 4th axis. • R = additional rail L = 2 or 3 m Useful travel maxi = 24 m.

	Format of the beam width				
	20	**25**	**30**	**35**	**40**
Cutting width (mm)	2000	2500	3000	3500	4000
Cutting length (mm)	3000+R	3000+R	3000+R	3000+R	3000+R
Total width (mm) *	3410	3910	4410	4910	5410
Total length (mm) *	6200+R	6200+R	6200+R	6200+R	6200+R
Total height (mm) *	2165	2165	2165	2165	2165

** excluding safety zone and equipments (plasma power source, filter, etc ...)*

EUROTOME 2

Thermal cutting machine: easy to use, versatile and cost-effective

EUROTOME 2: a rugged mechanical machine design which brings together all the necessary qualities for the implementation of oxycutting, plasma and marking processes.

Equipped with the HPC 2 numerical control with an high quality 19" touchscreen, the EUROTOME 2 fits to all fabrication needs from the lowest thickness (0.5 mm) to the most important with all processes (oxyflame cutting and/or plasma).

Its concept is versatility, **EUROTOME 2 can be equipped with various tools**: 1 to 4 oxyfuel torches managed by OXY Essential, a plasma installation (FLEXCUT 125 CE or NERTAJETHPi), a marking tool and a VXK bevelling tool.

The various sizes of beam width (sizes 15, 20, 25, 30 & 35) and length of railway (original rail effective travel 3 m can be extended with 3 m or 1.5 m modules).

Main technical characteristics:

- Travel speed 15 m/min with double motorisation,
- Brushless motorisation ensuring accuracy and fluidity of movement,
- Separate table on the machine frame,
- Managed by HPC 2 digital process.

2016-318

"A la carte" version	15	20	25	30	35
Cutting width (mm)	1500	2000	2500	3000	3500
Cutting length (mm)	3050+R				
Total width (mm) *	3300	3800	4300	4800	5300
Total length (mm) *	3600	4100	4600	5100	5600
R = additional rail by modules of 3 m or 1.5 m					

** excluding safety zone and equipments (plasma power source, filter, etc...)*

Compatible with standard EN ISO 17916: 2016

	Plasma process	OXY process
Number	2	up to 4
Type	FLEXCUT 125 CE NERTAJET HPi 150 or 300	**OXY Essential with:** OXYCUT MACH OXY MACH HP MACH HPi
Main options		

Pneumatic marker, straight bevelling block VXK, tube cutting, automatic igniter, capacitive sensor, cabinet cooling by vortex, positioning laser.

OXYTOME 2 & PLASMATOME 2 HPi

Thermal cutting machine completely automated, robust, versatile and efficient

The OXYTOME 2 / PLASMATOME 2 HPi range integrates all the features required to implement the plasma and/or oxycutting process. These machines are suitable for all trades using plasma and oxycutting. Their concept is versatility and a wide choice:

Plasma installations:

- From NERTAJET HPi 150 to 600 A in single torch or bi-torch.
- FLEXCUT 125 CE in single or bi-torch.

Oxy installations:

- Full automatic management of oxyfuel process thanks to OXY Essential or OXY HPi systems depending thickness capacity needs.

Applications:

- Cut from 0.5 to 300 mm thickness low alloy steels or non-alloy steels,
- 150 mm thickness stainless steel,
- 130 mm thickness light alloys.

Uses:

- Dry plasma cutting to immersed plasma cutting, cut of tubes.

Main technical characteristics:

- Travel speed 15 m/min,
- Double motorisation in base version,
- HPC 2 digital process: management and control fully automated for plasma and oxycutting process,
- **OXYTOME 2 HPi** can receive up to 6 tools (6 OXY or 4 OXY and 2 plasma),
- **PLASMATOME 2 HPi** can receive up to 2 plasma installations.

"A la carte" version	15	20	25	30	35	40	45
Cutting width (mm)	2065	2565	3065	3565	4065	4565	5065
Cutting length (mm)	3350+R						
Total width (mm) *	3500	4000	4500	5000	5500	6000	6500
Total length (mm) *	4996+R						
R = additional rail by modules of 3 m or 1.5 m / useful travel 30 m maxi.							

** excluding safety zone and equipments (plasma power source, filter, etc...)*

	Plasma process	OXY process
Number	up to 2	up to 6
	6 tools maxi	
Type	NERTAJET HPi 150 NERTAJET HPi 300 NERTAJET HPi 450 NERTAJET HPi 600	**OXY Essential or OXY HPi with:** OXYCUT MACH OXY MACH HP MACH HPi
Main options		
Cut of tube, micro percussion marker, laser positioning, 4th axis, automatic indexing, straight bevelling block VXK, camera, aerial cable chains.		

OXYTOME & PLASMATOME RS HPi

Medium and large format machines for thermal cutting. Robust, versatile and efficient for intensive use.

The OXYTOME / PLASMATOME RS range integrates all the features required to implement the plasma and/or oxycutting process. These machines of medium and large format are suitable for all trades requiring intensive production. In semi automatic version or fully automated they implement versatile applications:

Plasma installations:

- From NERTAJET HPi 150 to 600 A in single torch or bi-torch.

Oxy installations:

- Full automatic management of oxyfuel process thanks to OXY HPi system.

Applications:

- Cut from 0.5 to 300 mm thickness low alloy steels or non-alloy steels,
- 150 mm thickness stainless steel,
- 130 mm thickness light alloys.

Uses:

- Dry plasma cutting to immersed plasma cutting with or without automatised bevelling.

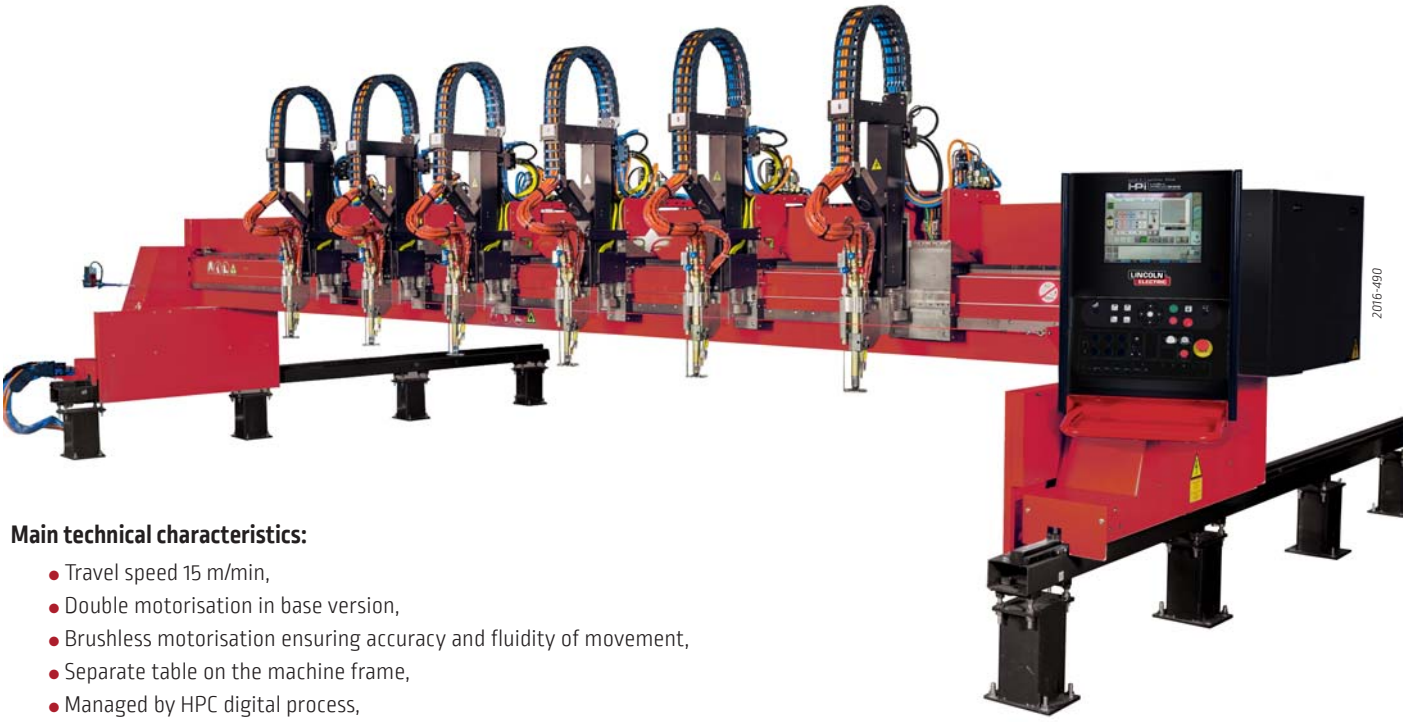

Main technical characteristics:

- Travel speed 15 m/min,
- Double motorisation in base version,
- Brushless motorisation ensuring accuracy and fluidity of movement,
- Separate table on the machine frame,
- Managed by HPC digital process,
- **OXYTOME RS** can receive up to 8 tools (8 OXY or 6 OXY and 2 plasma),
- **PLASMATOME RS** can receive up to 2 plasma installations,
- **With version HPC digital process** management and control fully automated for plasma and oxycutting process.

"A la carte" version	30	35	40	45	50	55
Cutting width (mm)	3425	3925	4425	4925	5425	5925
Cutting length (mm)	3050+R					
Total width (mm) *	4920	5420	5920	6420	6920	7420
Total length (mm) *	4715+R					
R = additional rail by modules of 3 m or 1.5 m / useful travel 30 m maxi.						

** excluding safety zone and equipments (plasma power source, filter, etc...)*

	Plasma process	OXY process
Number	up to 2	up to 8
	8 tools maxi	
Type	NERTAJET HPi 150 NERTAJET HPi 300 NERTAJET HPi 450 NERTAJET HPi 600	**OXY HPi with:** OXYCUT MACH OXY MACH HP
Main options		
Cut of tube, micro percussion marker, laser positioning, 4th axis, automatic indexing, straight bevelling block VXK, camera, aerial cable chains.		

OXYTOME & PLASMATOME TWIN HPi

Robust high-precision machines in medium and large format for thermal cutting with fully automated control.

The OXYTOME / PLASMATOME TWIN HPi range is proposed in medium and large format. It fits all trades for the lowest thicknesses (0.5 mm) to the largest accessible for plasma and / or oxycutting.

Its linear guideline systems fully protected, double beam concept, fluidity of movement and dynamism make a machine specially designed for plasma or OXY HPi cutting at intensive use.

It is perfectly adapted to implement bevelling applications with plasma HPi all automated.

Combined with one or more torches, it provides versatility cutting applications and cuts of high quality: the HPi Lincoln Electric quality.

Full automatic management of oxyfuel process thanks to OXY HPi system.

Main technical characteristics:

- Travel speed 15 m/min,
- Double motorisation in base version,
- Brushless motorisation ensuring accuracy and fluidity of movement,
- HPC digital process: management and control fully automated for plasma and oxycutting process,
- **OXYTOME TWIN HPi** can receive up to 4 tools,
- **PLASMATOME TWIN HPi** can receive up to 2 plasma installations,
- Double beam transverse with roller bearing,
- Rails with roller bearing fully protected on longitudinal axis,
- Motor gearboxes with play adjustment.

"A la carte" version	30	35	40	45	50
Cutting width (mm)	3425	3925	4425	4925	5425
Cutting length (mm)	4535+R				
Total width (mm) *	4920	5420	5920	6420	6920
Total length (mm) *	6200+R				
R = additional rail by modules of 2 m or 3 m / useful travel 24 m maxi.					

** excluding safety zone and equipments (plasma power source, filter, etc...)*

	Plasma process	OXY process
Number	up to 2	up to 3
	4 tools maxi	
Type	NERTAJET HPi 150 NERTAJET HPi 300 NERTAJET HPi 450 NERTAJET HPi 600	**OXY HPi with:** OXYCUT MACH OXY MACH HP
Main options		
NERTAJET BEVEL HPi, cut of tube, micro percussion marker, laser positioning, 4th axis, automatic indexing, straight bevelling block VXK, camera, aerial cable chains, drilling unit.		

CYBERTOME

Machine for large and extra large widths metal sheets with on-board operator for intensive use in the harshest environments. Robust, versatile and efficient.

The CYBERTOME range combines all the qualities necessary for the implementation of the plasma process and/or oxycutting high capacity. These machines, available in large and extra large formats, are adapted to all applications ranging from thin material (0.5mm) to the largest accessible for plasma and / or oxycutting. In semi automatic version or fully automated they implement versatile applications:

Plasma installations:

- From NERTAJET HPi 150 to 600 A in single torch or bi-torch.

Oxy installations:

- Full automatic management of oxyfuel process thanks to OXY HPi system.

Applications:

- Cut from 0.5 to 300 mm thickness low alloy steels or non-alloy steels,
- 150 mm thickness stainless steel and 130 mm thickness light alloys.

Uses:

- Dry plasma cutting to immersed plasma cutting with or without automatised bevelling.

The CYBERTOME may receive:

- HPC digital process allowing management and control fully automated for plasma and oxycutting process,
- Automatic indexing of tools,
- Differents marking tools for traceability,
- Automatic plasma bevelling unit,
- Oxycutting VXK bevelling unit,
- Cut of tube,
- Thermal protection (heat shields and cooling machine) for cutting very thick.

Main technical characteristics:

- Travel speed 15 m/min or 30 m/min,
- Double motorisation in base version,
- Brushless motorisation ensuring accuracy and fluidity of movement,
- managed by HPC digital process.

"A la carte" version	40	50	60	70	80	90	...120
Cutting width (mm)	4000	5000	6000	7000	8000	9000	12000
Cutting length (mm)	3000+R						
Total width (mm) *	6500	7500	8500	9500	10500	11500	14500
Total length (mm) *	6000+R						
Total height (mm) *	2640						

Other dimensions on request

R = additional rail by modules of 6 m - 3 m or 1.5 m

** excluding safety zone and equipments (plasma power source, filter, etc...)*

	Plasma process	OXY process
Number	up to 2	up to 12
	12 tools maxi	
Type	NERTAJET HPi 150 NERTAJET HPi 300 NERTAJET HPi 450 NERTAJET HPi 600	**OXY HPi with:** OXYCUT MACH OXY MACH HP

Main options
NERTAJET BEVEL HPi, cut of tube, micro percussion marker, laser positioning, 4th axis, automatic indexing, straight bevelling block VXK, camera, aerial cable chains, drilling unit.

NERTAJET BEVEL HPi

NERTAJET BEVEL HPi is an efficient tool for all cuts that require particular preparation for welding, or any other applications requiring bevels. It thus makes it possible to make V, Y, X and K bevels in a large range of thicknesses and materials.

Precise and robust

- "Machined robot wrist" technology offering:
  - High positioning accuracy: 3 axes are used to ensure the inclination and orientation of the torch.
- High robustness with low sensitivity to shocks:
  - High mechanical conception robustness base on rotation axis,
  - The bottom of the arm is quite far from the plate and tilting parts,
  - Multi-directionnal choc sensor with large clearance.
- Fully controlled by digital control HPC BEVEL EtherCAT.
- EtherCAT motorization with absolute encoders.
- Compatible with NERTAJET HPi 300 & 450.

AC System integrated intelligent database

- Integrated in the numerical control, AC System automatically corrects the paths to compensate the angular and dimensional deviations generated by the plasma cutting process.
- Allows even when the requested chamfer is not known, to obtain a proposal of parameters defined by extrapolation of the existing data,
- The intuitive & user-friendly IHM gives quick and easy access to the database to refine or create new operating points.

Function CDHC (Cutting Digital Height Control)

- Allows control of torch height during cutting phases. It is particularly important for the respect of the dimensions of the parts and the quality of realization of the chamfers.
- Automatically adjusts the torch position to always be at optimal height to generate the best cutting quality.
- Automatically compensates the wear of plasma consumables especially the electrode. Without this compensation, the dimensions of the chamfered parts would derive of several millimeters.

Advanced features NERTAJET HPi

- Cycle Boost and Instant Marking: to increase productivity.
- Hole Master HPi to increase cutting quality.
- Twin Detect for cutting on dished end.

Function TSB (Trajectory Strategy for Bevel)

- Optimized cutting strategy for a excellent dimensional result.
- Optimized learning cycle for accurate acquisition of sheet position.
- Specific torch orientation cycle for multi-pass chamfers for optimum dimensional results.

	PLASMATOME / OXYTOME RS or TWIN	CYBERTOME
NERTAJET BEVEL HPi 300 or 450	✓	✓

Type of bevel	V, Y, X and K Dimensional and angular accuracy according to ISO 9013
Rotation axis	+/ 455° 30 rpm/min
Tilt torch	+/- 52° 40 tr/min Allows cutting angles of up to 50°
Z axis slide	250 mm 5 m/min
Options	Tube cutting, cuts on dished end, Z axis slide of 800 mm, mechanical sensor for evolutive chamfering on standard plates

OPTIONS

Pneumatic drill unit

Pneumatic drill system:

This option is a pneumatic drilling mounted on a pneumatic slide equipped with ball bearing rails giving it rigidity and precision. It can be use to produce holes or centering holes.

Main characteristics:

- Capacity diameter for carbon steel: 8 mm,
- Capacity diameter for aluminium: 10 mm,
- Feed force: 350 N,
- Max power: 0.22 kW, - speed: 1100 rpm,
- Maximum stroke: 80 mm,
- Max air flow: less than 6 l/s,
- Standard drill chuck.

Numerical drilling unit

Drilling unit can be fitted on cutting machine to combine drilling, thermal cutting and marking in one operation:

- Sheet metal press system,
- Tool length measure system,
- Automatic tool exchanger.

Fully interfaced with the HPC DIGITAL PROCESS System, the management of the drilling unit is simple and user friendly.

Fully automatic management of the drilling unit. Simple and user friendly database of parameters for drilling unit. This database (spindle speed, rotated speed, ...) can be updated by the operator depending on the tool used. Minimum and maximum sheet metal thickness depends on the application and cutting machine.

Material could be drilled: carbon, stainless steel and aluminium.

	Technical characteristic
Drill diameters	up to 30 mm
Tool type	ISO 40
Max. spindle motor power	up to 20 kW
Automatic tool exchanger	up to 30 tools
Machine compatible	OXYTOME / PLASMATOME TWIN HPi CYBERTOME

Tube cutting

This option has been developed to meet many cutting applications on round tube from small to large diameter. Thanks to its software interfaces, the machine is able to cut different types of geometry on tube: stitching, cod mouth, separation cut, straight or evolutive bevel etc...

The option is composed of a cabinet control interconnected to the HPC DIGITAL PROCESS, of a motorised headstock with fume extraction duct and an adjustable positioning system according to the diameters of tubes. The positioning of the tube offers many advantages including that the cut piece remains in position after cutting thus avoiding potential risk to safety or damage.

Main technical characteristics:

- With standard motorised headstock:
  - Diameter 400 mm*,
  - Lenght up to 6 m,
  - Weight maxi of tube: 550 kg,
  - Speed maxi: 30 rpm.
- Central fumes extraction,
- Tube positioning by cross rotators or tube rotators,
- Others dimensions on request,
- NERTAJET BEVEL HPi in option.

** Other diameter on demand*

2nd numerised transversal axis

Automatic adjustment of the distance between cutting tools done with two CNC axes.
This option can be managed automatically with the nesting software. Inside a same program, different distances can be adjusted between the two torches depending the parts sizes to cut.

This option is mainly used with plasma system but can also be adapted with oxy-fuel process. This option is fully mana a very nice control interface.

OPTIONS

Cooling systems

Electrical cabinet cooler vortex system

Cooling done by vortex effect with air pressurized. It cools the electrical cabinet and limit the introduction of dusts due to the over pressure. Designed to work in hostile environment.

Air cooling system for electrical cabinet

Air Cooling system with heat exchanger reducing drastically the temperature inside the electrical cabinet. Designed to work in countries where temperature reach 50 °C and more.

Operator visual protection

Curtain easy to adjust to protect the operator against the plasma electric arc.

Voltage inverter

This option is developed to protect the CNC or the machine against the fluctuation and hazard on the voltage supply. It can be propose in two version:

- One able to protect the CNC,
- One able to protect the machine & CNC *.

** oxyfuel process wil be cover but flot the plasma*

Cutting table lighting

Lighting of the cutting table with 2 leds projectors place on each side of the machine.

Gas driven single point automatic lubricators

The units are supplied ready-to-use connected to ball bearing transversal carriages and filled with lubricants. Tool-free activation and time-setting allow easy and accurate adjustment of lubrication flow.

Flexible dispense rate from 1 to 12 months.

Stoppable or adjustable if required.

It's simplified the maintenance of the machine and increase life time of the ball bearing carriages.

Positioning

Visioprocess

A camera is used to display the torch position on a control screen.
The monitored area is about 250 mm in diameter and promotes correct positionning before and during cutting. The device also monitors the arc.
The operator can control cutting operations and position the torch no matter where the control console is located.
The camera is protected by an anti-dazzle device to protect it from the effects of the plasma arc. The operator can choose between a monochrome or colour display.

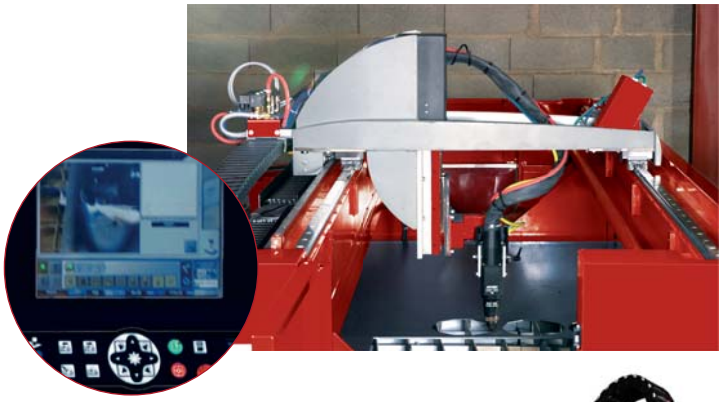

Positioning

Positioning laser with greencross

Controlled by the interface of the HPC, this tool helps the operator to position the machine to start cutting program or make the alignment of the sheet metal.

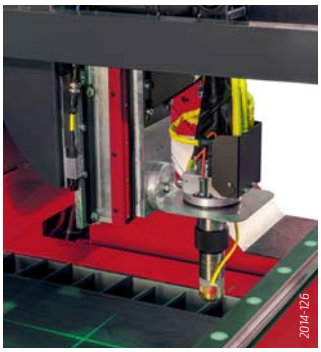

Laser to detect the position of the plate

This option is a laser for automatically positioning a cutting program according to the position of the sheet. It works following one axis.

Markers

Pneumatic marking

For punching and engraving plates.

The depth of marking is controlled by varying the compressed air pressure and the speed. Recommended for use on plates thicker than 15 mm.

Wen marker

This pneumatic vibrator engraves sheet metal by slightly scoring the surface finish. Well adapted for thin and medium thicknesses.

Micro-percussion marking

It allows a fast and accurate marking.
This system can carry out several lines marking with small characters (less than 10 mm).
To perform the marking, the micro marker box is automatically positioned above the sheet metal. Then it drives a pen following its 2 axes dedicated to draw characters and mark the sheet with the desired power (marking depth).

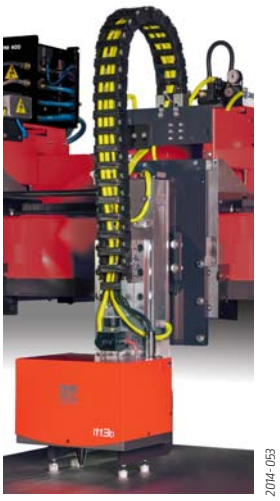

Felt marking

This marker uses a felt tip which has been especially selected for its strength.

It operates by gravity and does not alter the surface finish of the material. It is intended for use on galvanized steels, aluminium, stainless and black prepainted steels, depending on the quality of their surface finish.

HPC DIGITAL PROCESS 2

The most intuitive and efficient numerical control on the market.

It fully manages the cutting machine, from the trajectory to the processes.

The ergonomics of the HMI and its large 19" touch screen make it a user-friendly and easy-to-use tool.

In particular, it includes all the important functions suited to the thermal cutting business such as: Cutting recovery menu, parametric shapes, sheet metal alignment, test menus, automatic adjustment of parameters...

The features of HPC 2:

- 50 Parametric Forms,
- Parts directory programmed on external software,
- ISO code editor,
- Scale, rotation, symmetry,
- Choice origin program,
- Management of sheet metal works,
- Sheet metal alignment assistance tool,
- SMART DATA BASE for "intelligent" plasma and flame cutting processes,
- Controls of processes,
- Dynamic visualization of the part and tracking of the trajectory in real time,
- Program recovery menu: forward/backward on trajectory, offset for restart of the off-trajectory cut, zoom,
- Complete setup for machine configuration: Tools, Options, Languages,
- Option: Tube cutting, 2nd digitized transverse axis, NERTAJET BEVEL HPi, digital drilling, automatic indexing, visio-process, laser positioning or measurement...
- 17 Languages available.

Hardware & Communication:

- Robust industrial computer,
- SSD hard drive with large capacity,
- Windows 7,
- Real-time trajectory management system,
- ETERCAT bus management,
- 19" industrial touch screen,
- USB, NETWORK & TELESERVICE.

How works the automatic adjustment of processes on HPC DIGITAL PROCESS ?

Phase 1 :

After selecting the program, the operator chooses the material to be cut.

Phase 2 :

HPC provides one or more solutions adapted to the application.

Phase 3 :

After accepting the proposal, the setting of each parameter is done automatically.

Phase 4 :

When the tool (plasma torch or oxyfuel torch) is equipped with consumables recommended, the machine is ready to cut.

You have chosen to use the data base of HPC or to create your own data base.

JOB function gives you the possibility of attaching this process management to a program loaded and selected in the numerical controller.

This combination can be stored by the JOB function and then used by any operator.

Advanced or Essential control panel:

The Advanced swivel console is equipped with a joystick, ergonomic manual controls and a maintenance mode to simplify the use of the machine. It can be found in particular on the OXYTOME 2 and PLASMATOME 2 range. Also available as a fixed console version with ALPHATOME 2.

The Essential swivel Desk is fully touch-sensitive and is equipped with a maintenance mode that simplifies the use of the machine. It is found in particular on the EUROTOME 2 range. Also available in fixed console with OPTITOME 2.

2016-321

Software MAGICNEST JUNIOR for HPC

Module design and programming installed on digital HPC command to:

- Import all type of program (dxf, dwg, dstv...),
  - create customized drawing,
- Use a database of standards forms complementary than the HPC propose in standard,
- Customize its own standard forms (optional),
  - create a machine program,
- Apply technology for chamfering (optional).

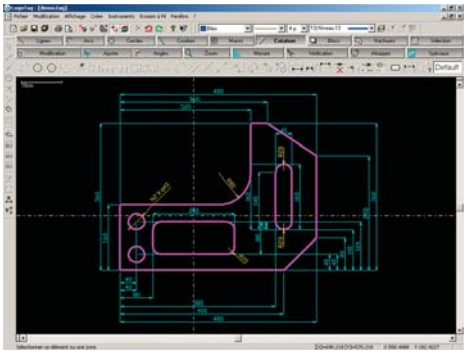

Production monitoring on HPC

Module dedicated for production monitoring. The HPC saves all the actions done during production. Those files can be edited with Excel or can be automatically analyzed by CAD/CAM software.
Those files data can be saved on a USB key or directly on a customer directory if the CNC is connected on his network.

Data available:

- Number of cutting, - time of cutting,
- Material and process chosen,
- CNC default,
- Failed cut part...

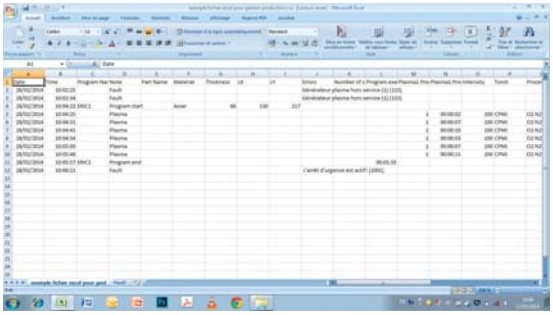

CUTTING SOFTWARE

A well adapted computerized help increases the automation and the return on investment of machines fitted with the CNC. Lincoln Electric can supply software specially designed for thermal cutting CAD, pressure vessel shapes developed flat, interleaving, plate stock control, communication, translation of external files and files produced by other CAD systems (DXF, DWG, DSTV...).

MAGICNEST Software range

Four products that run with the latest Windows operating systems to enable to prepare and control thermal cutting production.
The software is designed to be intuitive, simple and user-friendly, while offering powerful and effective functions.

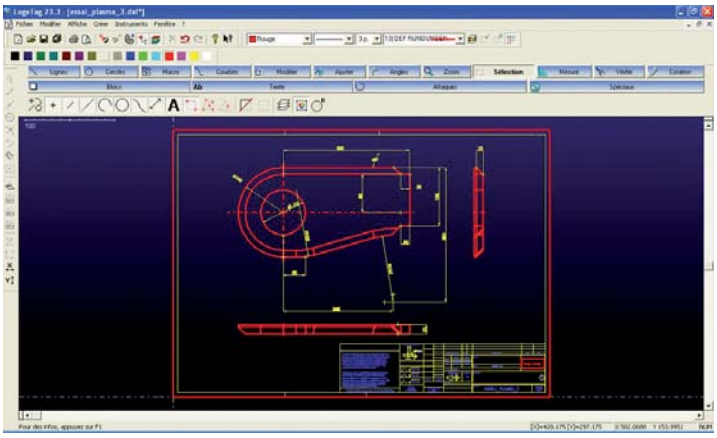

MAGICNEST JUNIOR

Principally designed for small sized cutting machines, MAGICNEST JUNIOR is an intuitive and easy-to-use CAD software that integrates 2D designing tools. Its cutting technology, simulation modules complement the product for the fuss-free control of the machine.
It can also read and modify all types of drawing - DXF, DWG, DSTV etc.
The serial transmission module WINRS completes the functionalities of the product.

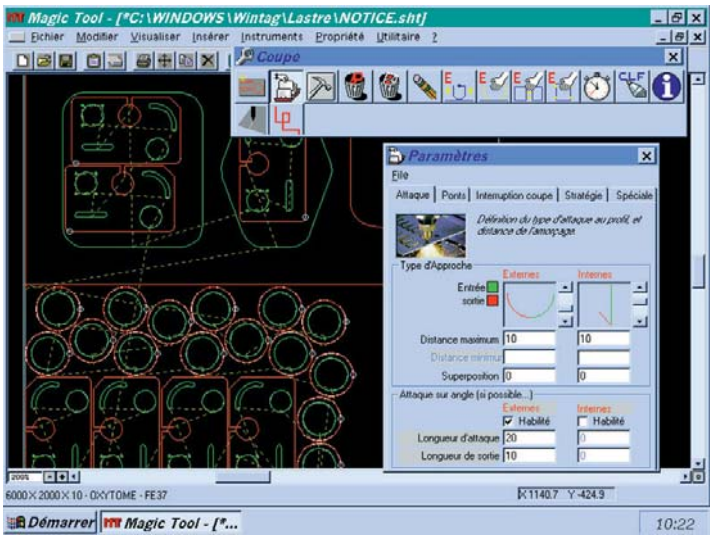

MAGICNEST 01 (manual nesting)

MAGICNEST 01 includes MAGICNEST JUNIOR and a nesting module that allows to manage quotes, orders, sheet stock and piece nesting. Its database makes it possible to obtain accurate quotes in a very short time, offer the manual cutting strategy, save know-how and generate machine programs. Its many tools - multiple-torch cutting, junctions, bridges, will enable you to fully control production and retain simplicity and intuitiveness of use.

MAGICNEST 10 (automatic nesting)

This is the top end version of MAGICNEST 01 for thermal cutting machine. MAGICNEST 10 ensure automatically the following operations:

- Nesting pieces using the best strategy for maximising material savings,
- IT application of the cutting technology, multiple-torch cutting, - cutting entry/exit, bridges, micro-junctions, common cutting, scrap recovery,
- Tool path and machine program.

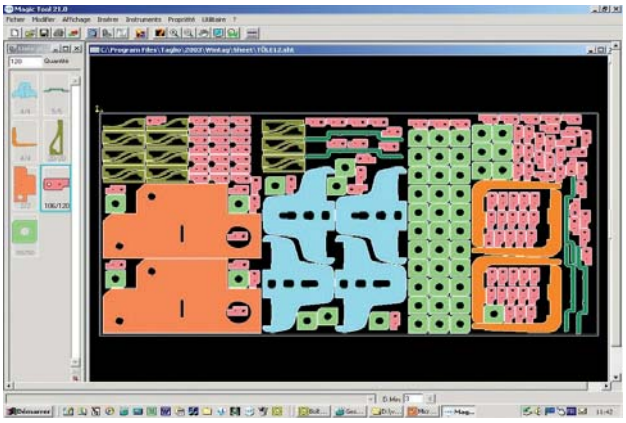

MAGICNEST EXPERT PLUS

This is the best and complete version for machine with option bevel, indexing or piercing. Drawing and nesting functions are similar to MAGICNEST 10. With bevel option, MAGICNEST EXPERT PLUS control open-ended bevelling units that use plasma technology. It may be used for all types of bevel - V ,Y, X and K - in multiple pass processes. Possibility to include duct module and special marking (SIC marking or inkjet) in option.

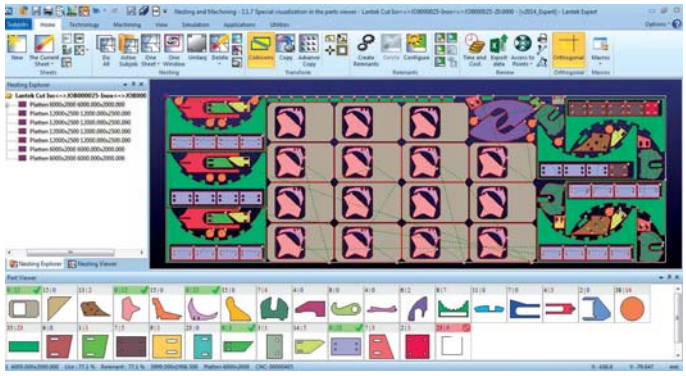

DUCT

Duct is a powerful module of MAGICNEST Expert Plus for calculating DUCT figures. Duct is designed in such a way that the user only has to follow the simple steps prompted by the system.

User simply has to select the figure to be developed, enter the required dimensions, and the figure will automatically be developed.

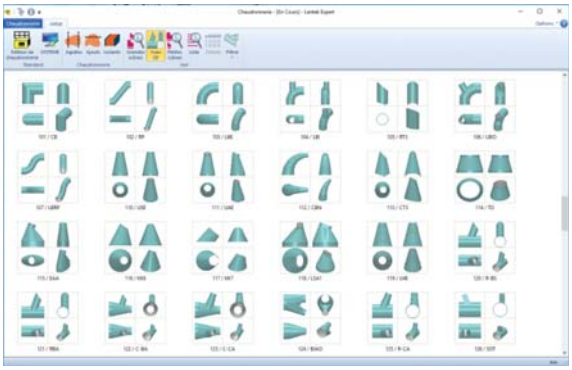

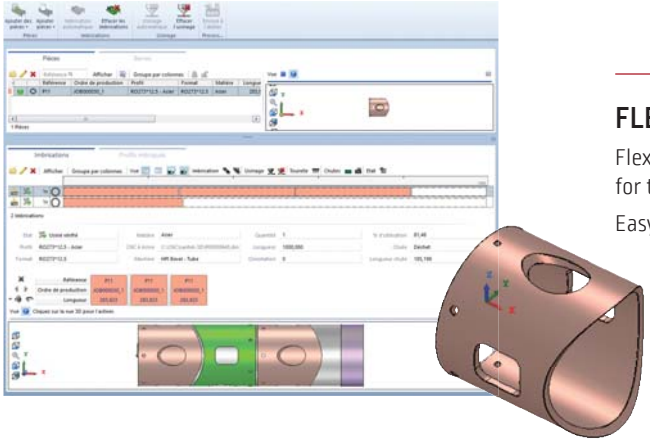

FLEX 3D

Flex3d Tubes is a member of the MAGICNEST Expert Plus family of products for the design and cutting of tubes.

Easy, flexible design Flex3D Tubes gives a real vision of the result on the screen.

It displays the exact tube and simulates in 3D.

Flex3D Tubes allows 3D design in an intuitive and simple way:

It gives the result that the user will obtain when cutting the profile on the machine.

EXTRACTION TABLES

Extraction tables for dry cutting

The extraction tables with air extraction offers unrivalled efficiency in terms of fume extraction thanks to its unique system of transverse extraction ducts.

Robustly designed in one-piece or modular form, the table is divided over its length into multiple sections, extraction taking place across the full width of the table on the module in operation only.

Mechanical or pneumatic flaps actuated by the displacement of the machine provide suction under the sheet at the place of cutting only.

This principle of operation guarantees optimum extraction, irrespective of the size of the sheet being cut, while maintaining a modest extraction air-flow rate.

Technical characteristics:

- Transverse duct extraction system,
- Division into 0.75 meter sections over the length of the table,
- Removable slag boxes,
- Removable workpiece supporting frame with flat irons (section 100 x 6 mm) and wire mesh grid (50 x 50 x 5 mm),
- Maximum capacity: sheet up to 300 mm thick.

Variable water level tables

Variable water level tables are specifically intended for immersed plasma cutting.

This procedure limits pollution by solid or gaseous matter and gives protection against audible and visual stress.

It improves accuracy of cutting while limiting distortions caused by heating of the workpiece.

Technical characteristics:

- Modular construction in lengths of 1.5, 1.75 and 2 m,
- Width: on request,
- Pivoting workpiece support frame.

Extraction tables for dry cutting

Table with slag automatic outfeed

The table has at its base a vibrating belt automatically recovering slag and possibly very small cut pieces.
The automatic cleaning system significantly extends the maintenance table maximizing cutting time.

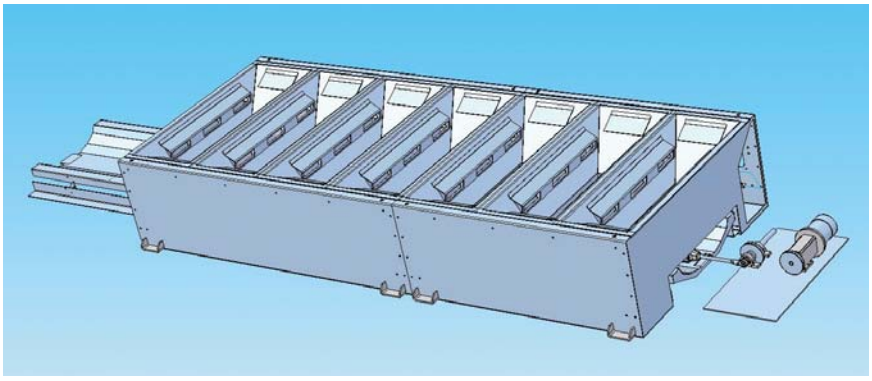

Technical characteristics:

- Transverse duct extraction system, monobloc or modular design,
- Division into 0,6 meter sections over the length of the table,
- Vibrating system recuperator of slag,
- Removable workpiece supporting frame with flat irons (section 150 x 6 mm),
- Maximum capacity: sheet up to 120 mm thick. (more on request),
- Length on request
- Standard width : 1.5 - 2 - 2.5 m.

Palletisable table

The palletisation system allows loading and unloading of sheets to cut out of the cutting area.

The preparation of sheets to cut is performed in masked time without risks for the operator.

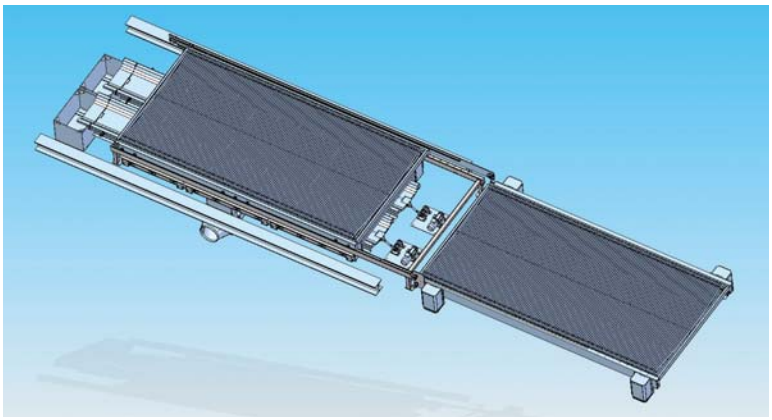

Technical characteristics:

- Cut area design : monobloc or modular,
- Division into 0.6 meter sections,
- Standard length : 3 m (more on request,
- Standard width : 1.5 - 2 - 2.5 m,
- Maximum capacity : 1900 kg/m^2,
- Mini height : 1 000 mm (installation without civil works),
- 2 carriages support sheet (electrical movement) with flat irons section 150 x 6 mm,
- 1 hydraulic elevator support for carriages palletisation,
- Option : slag automatic outfeed.

SERVICES

Lincoln Electric services: a complete offer for your production tools.

Far beyond the simple recommendation of processes or equipment, Lincoln Electric work with you in the service field by offering advice and expertise, demonstrations, feasibility studies, installation and commissioning of facilities, training and assistance to the start of production, maintenance, after-sales service and even upgrade of of your equipment.

Solution Centers for Automation

In our Solution Centers it's possible to see and test our cutting and welding systems of the latest generation, which are used for demonstrations and the supply of technical assistance.

Advices and Expertises

On the basis of a personalised diagnosis, our technical specialists will analyse your needs, identify potential improvements, build solutions along with you, define action plans and give you the support you need.

In your premises or in our Solution Centers for Automation.

Remote Service

Lincoln Electric offers innovative services with securely connected machines in order to increase performance of your tool:

- On line intervention allowing reduction of machines' down time.
- On line assistance and training for optimisation of your productivity.

Call Centers

A large team of technicians can answer to every question and keep your manufacturing tools to their best perfomance levels.

Machine installation and training

Dedicated teams are worldwide available to install your machines and train your manufacturing staff.

Our know-how is well known and our expertise based on experience is here to propose a large range of high quality training with customised solutions.

Maintenance

Lincoln Electric maintenance contracts provide the guarantee of a high performance level for your equipment.

The optimisation of the availability rate and of the life duration of your machines is key regarding your production costs.

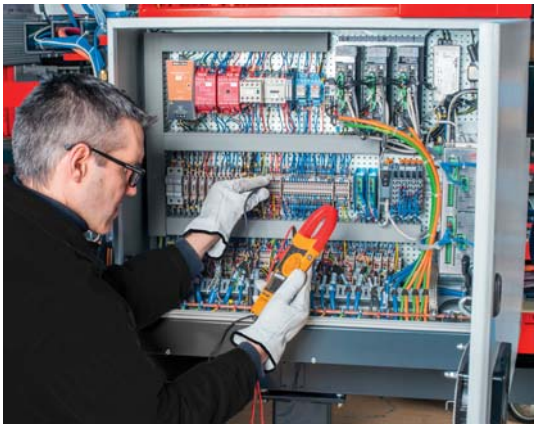

Production support

You have just invested in a new welding or cutting equipment and would like support while you start up the manufacturing process. Lincoln Electric can offer technical assistance aimed at helping you produce parts independently as soon as possible, by providing step-by-step tracking for the first pieces you turn out.

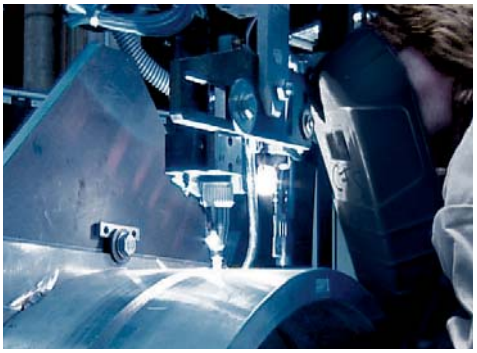

Upgrading your processes and machines

The retrofitting and upgrading services offer enhancement of life duration of your machines while giving new functionalities and new performances and applications.

BEING PRESENT LOCALLY
MAKES US MORE AWARE GLOBALLY

2.6
BILLION USD REVENUE

160
ACTIVE IN 160 COUNTRIES WORLDWIDE

11 000
EMPLOYEES WORLDWIDE

120
YEARS OF EXPERIENCE

CUSTOMER ASSISTANCE POLICY
The business of The Lincoln Electric Company® is manufacturing and selling high quality welding equipment, consumables, and cutting equipment. Our challenge is to meet the needs of our customers and to exceed their expectations. On occasion, purchasers may ask Lincoln Electric for information or advice about their use of our products. Our employees respond to inquiries to the best of their ability based on information provided to them by the customers and the knowledge they may have concerning the application. Our employees, however, are not in a position to verify the information provided or to evaluate the engineering requirements for the particular weldment. Accordingly, Lincoln Electric does not warrant or guarantee or assume any liability with respect to such information or advice. Moreover, the provision of such information or advice does not create, expand, or alter any warranty on our products. Any express or implied warranty that might arise from the information or advice, including any implied warranty of merchantability or any warranty of fitness for any customers' particular purpose is specifically disclaimed.

Lincoln Electric is a responsive manufacturer, but the selection and use of specific products sold by Lincoln Electric is solely within the control of, and remains the sole responsibility of the customer. Many variables beyond the control of Lincoln Electric affect the results obtained in applying these types of fabrication methods and service requirements.

Subject to Change – This information is accurate to the best of our knowledge at the time of printing. Please refer to www.lincolnelectric.com for any updated information.

www.lincolnelectriceurope.com

LINCOLN® ELECTRIC
THE WELDING EXPERTS®